4.5V-100V Vin, 1.2A, Step-down DCDC Converter

FEATURES

-
-
-
-
-
-
-
-
-
-
-
-
-
-
-

DESCRIPTION

APPLICATIONS

-
-
-

TYPICAL APPLICATION

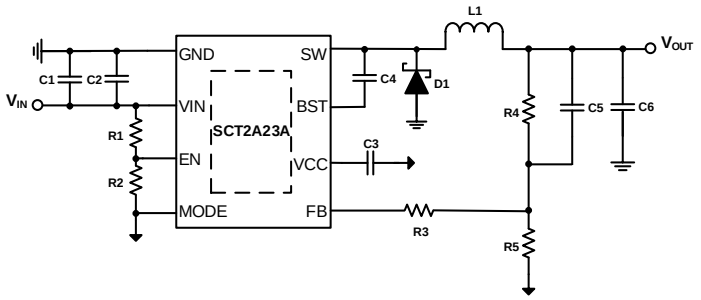

4.5V-100V, Buck Converter

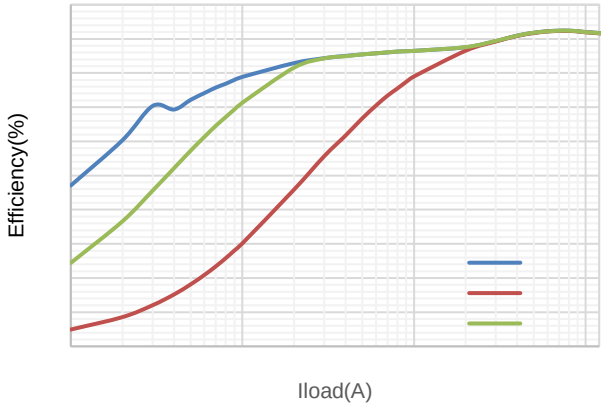

RECOMMENDED OPERATING CONDITIONS

ESD RATINGS

(1)
(2)

THERMAL INFORMATION

ELECTRICAL CHARACTERISTICS

TYPICAL CHARACTERISTICS

FUNCTIONAL BLOCK DIAGRAM

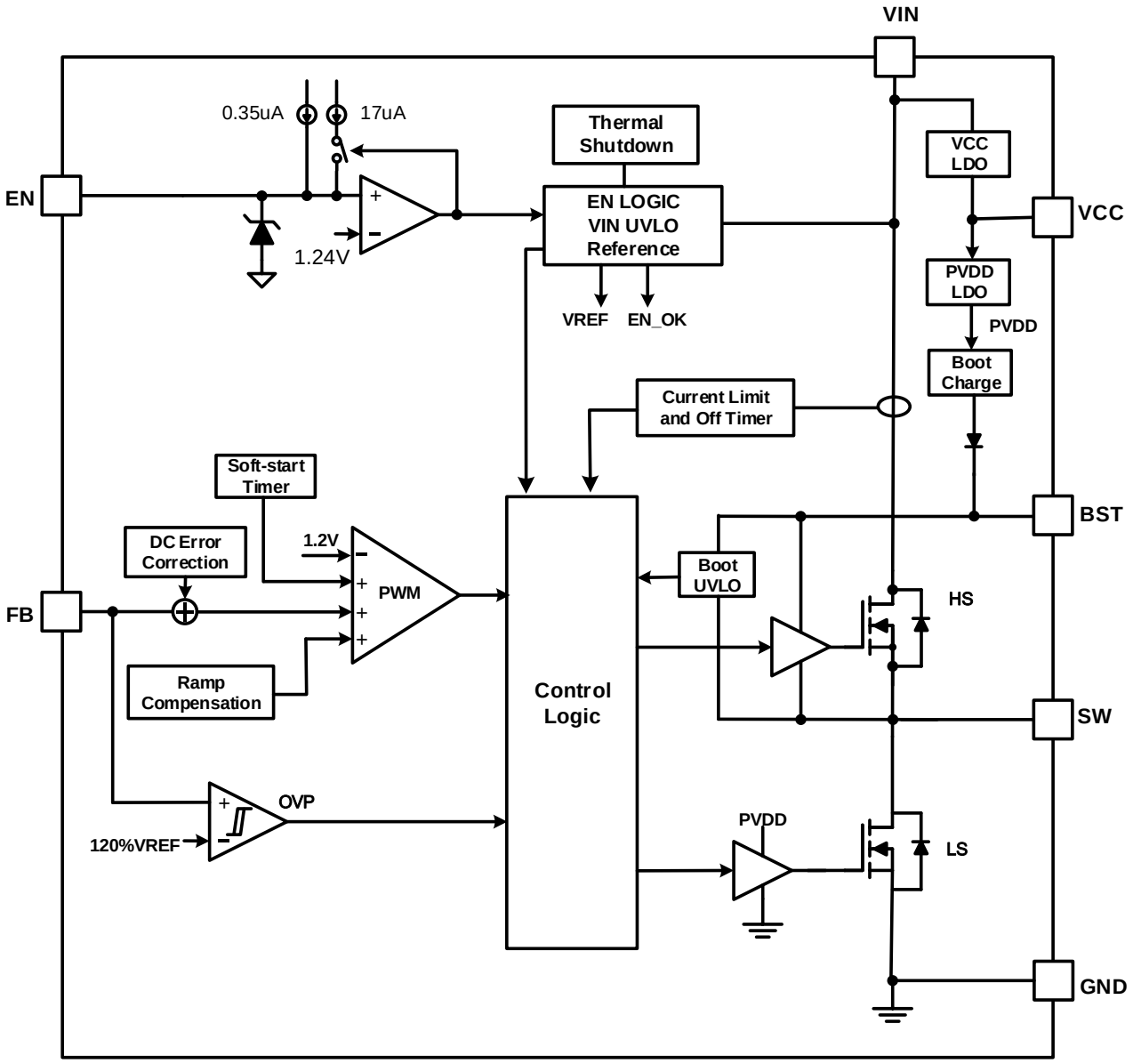

OPERATION

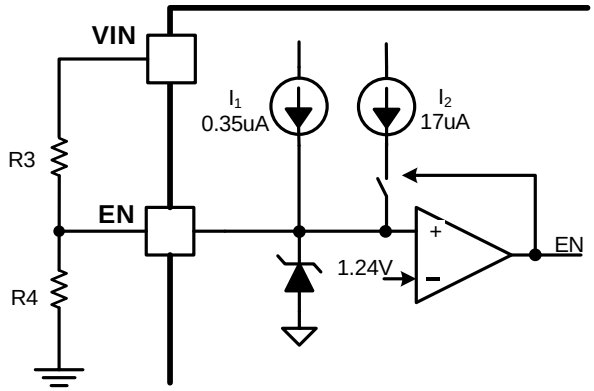
VIN
I1
0.35uA
I2
17uA
R3
EN
+
EN
1.24V
–
R4

±

-
-

APPLICATION INFORMATION

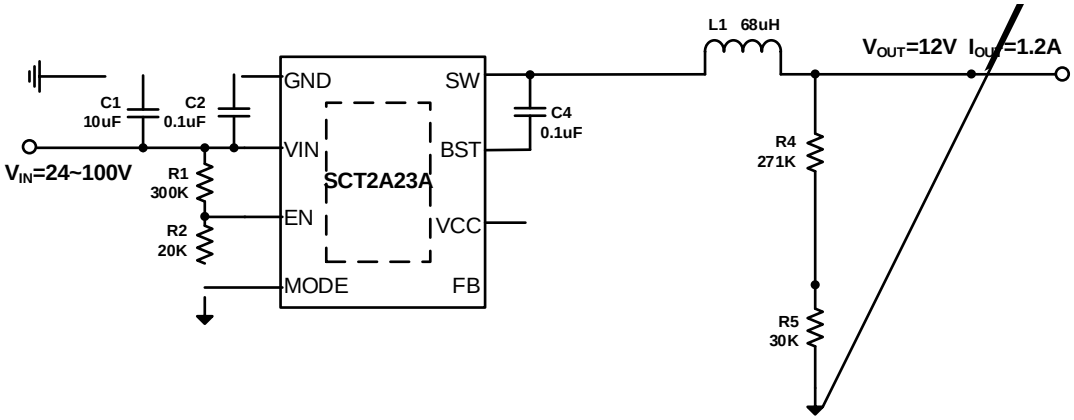

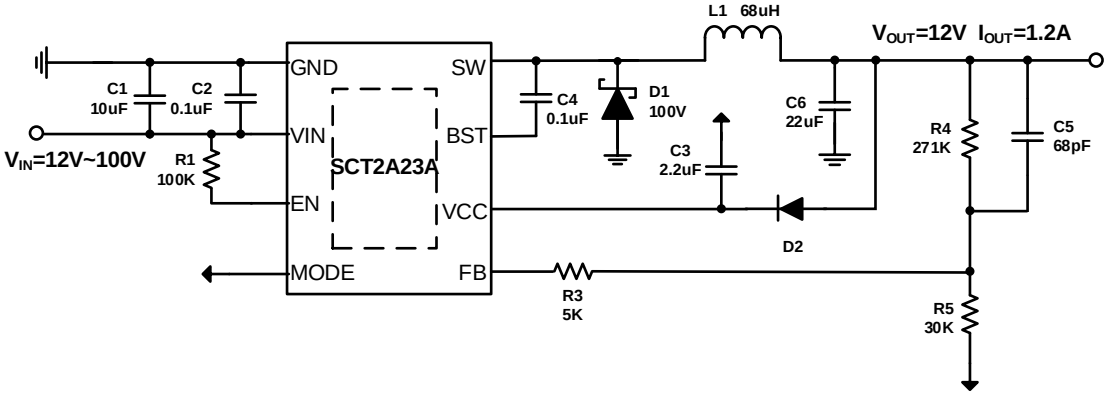
L1 68uH
VOUT=12V IOUT=1.2A
GND
SW
C1
10uF
C2
0.1uF
C4
0.1uF
D1
100V
C6
22uF
VIN
BST
R4
271K
C5
68pF
VIN=12V~100V
R1
100K
SCT2A23A
C3
2.2uF
EN
VCC
D2
MODE
FB
R3
5K
R5
30K

-
- |
-
-
-
-

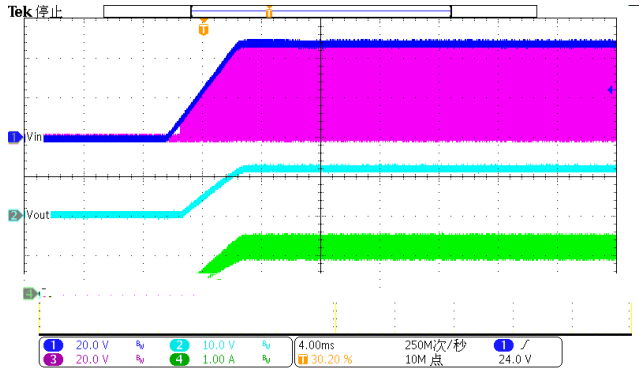
Tek 停止
Vin
Vout
IL
20.0 V
20.0 V
10.0 V
1.00 A
4.00ms
30.20 %
250M次/秒
10M 点
24.0 V

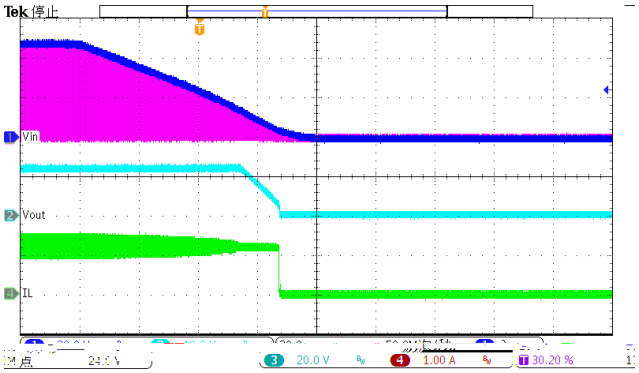
Tek 停止
Vin
Vout
IL
20.0 V
1.00 A
30.20 %

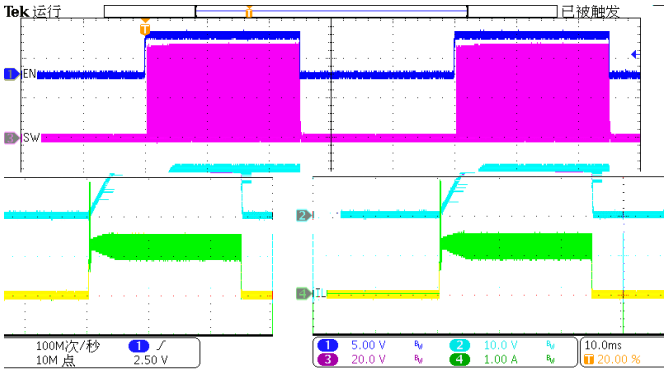
Tek 运行
已被触发
EN
SW
IL
100M次/秒
10M 点
2.50 V
5.00 V
20.0 V
10.0 V
1.00 A
10.0ms
20.00 %

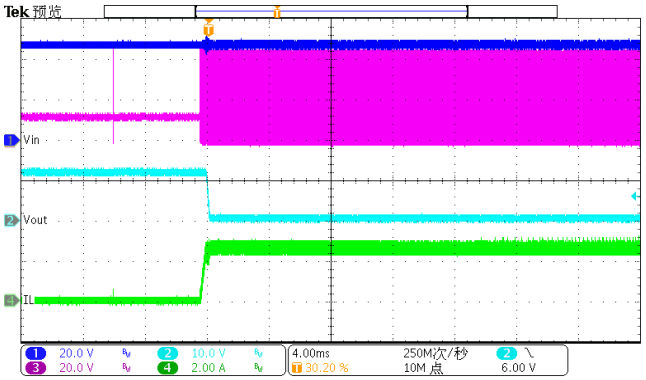
Tek 预览
Vin
Vout
IL
20.0 V
20.0 V
10.0 V
2.00 A
4.00ms
30.20 %
250M次/秒
10M 点
6.00 V

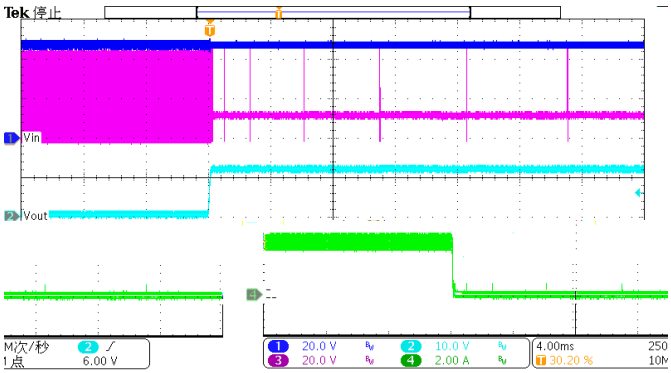
Tek 停止
Vin
Vout
6.00 V
20.0 V
20.0 V
10.0 V
2.00 A
4.00ms
30.20 %

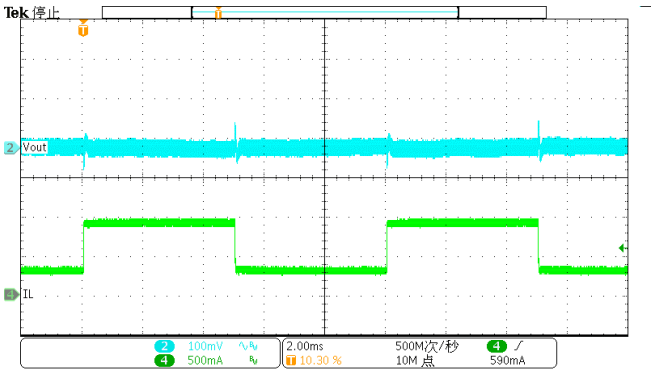
Tek 停止
Vout
IL
100mV
500mA
2.00ms
10.30 %
500M次/秒
10M 点
590mA

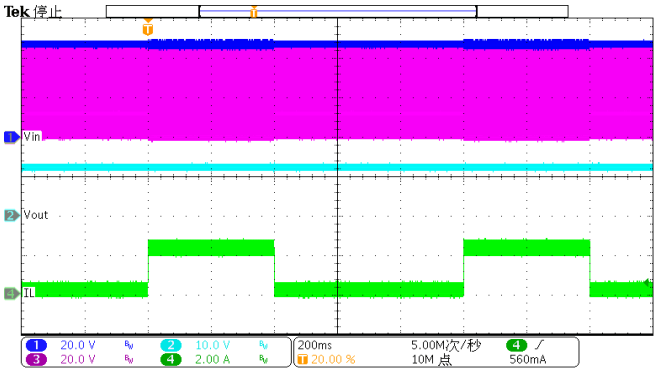
Tek 停止
Vin
Vout
IL
20.0 V
10.0 V
20.0 V
2.00 A
200ms
20.00 %
5.00M次/秒
10M 点
560mA

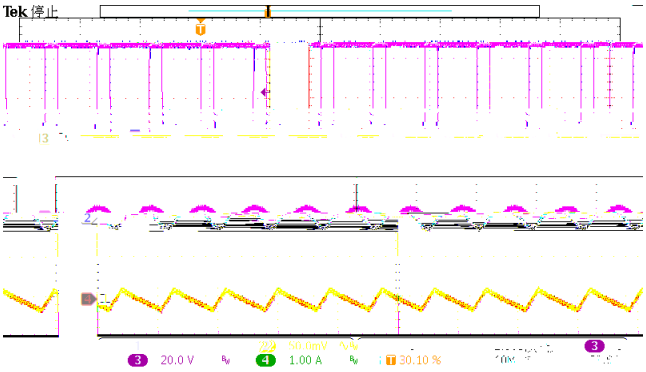
Tek 停止
20.0 V
1.00 A
30.10 %

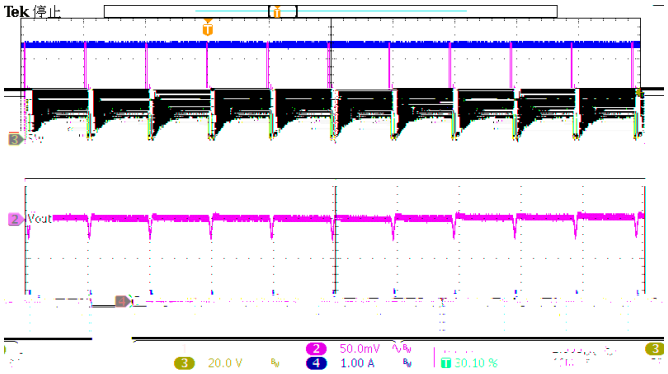
Tek 停止
Vout
20.0 V
50.0mV
1.00 A
30.10 %

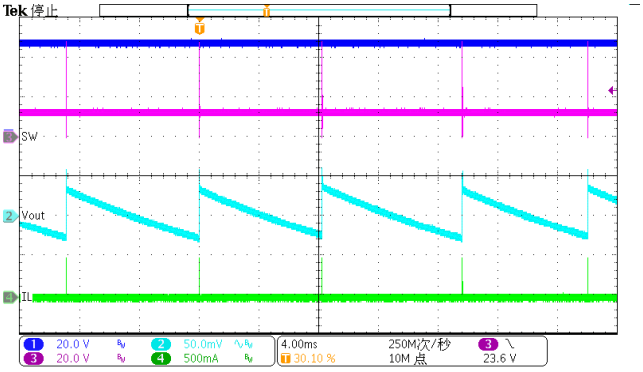
Tek 停止
SW
Vout
IL
20.0 V
50.0mV
20.0 V
500mA
4.00ms
30.10 %
250M次/秒
10M 点
23.6 V

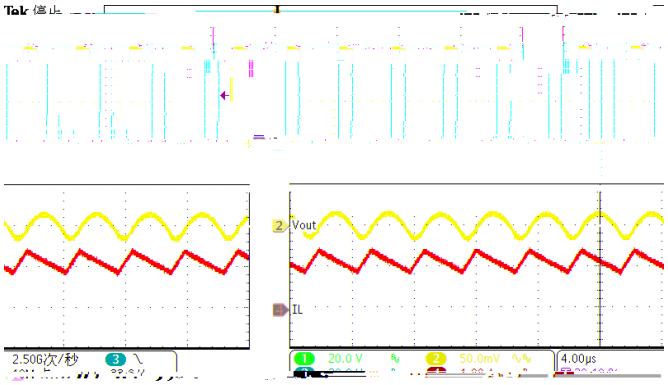
Vout
IL
2.506次/秒
20.0 V
50.0mV
4.00µs

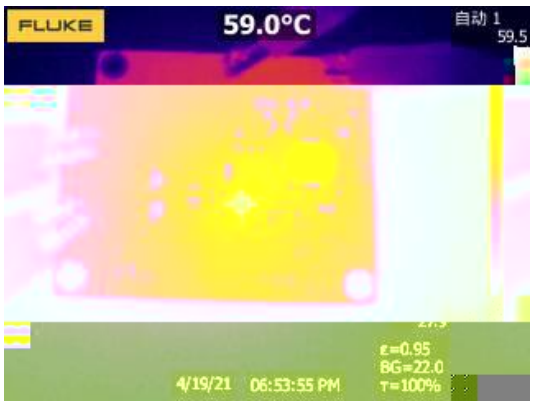
FLUKE
59.0°C
自动 1
59.5
ε=0.95
BG=22.0
τ=100%
4/19/21
06:53:55 PM

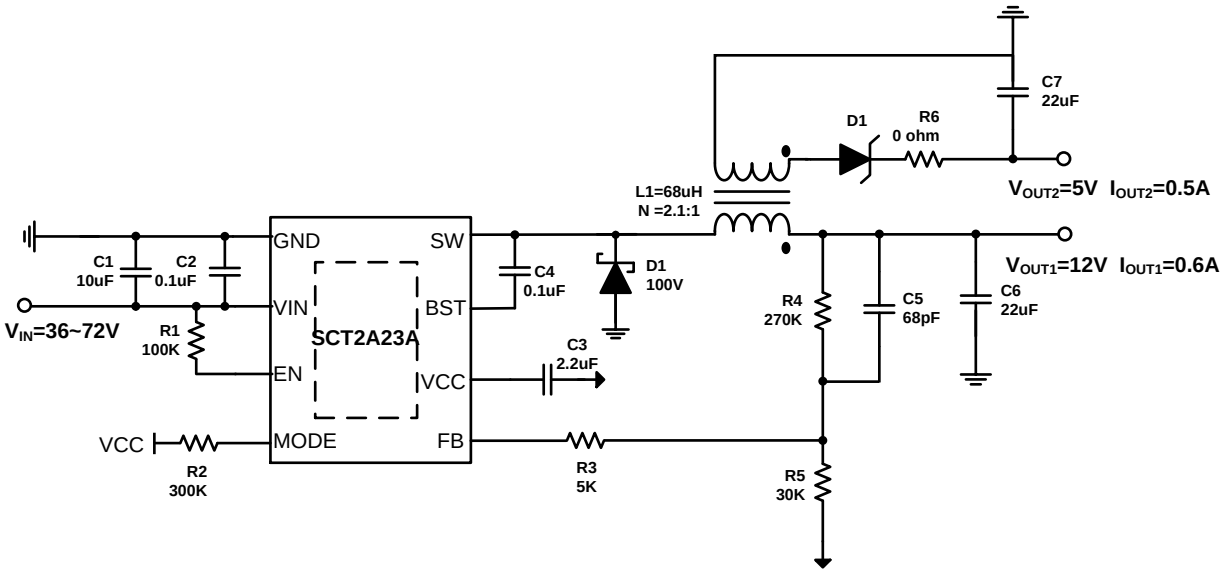
C7
22uF
D1
R6
0 ohm
L1=68uH
N =2.1:1
VOUT2=5V IOUT2=0.5A
GND
SW
C1
10uF
C2
0.1uF
C4
0.1uF
D1
100V
VOUT1=12V IOUT1=0.6A
VIN
BST
R4
270K
C5
68pF
C6
22uF
VIN=36~72V
R1
100K
SCT2A23A
C3
2.2uF
EN
VCC
VCC
MODE
FB
R2
300K
R3
5K
R5
30K

The primary output voltage in a Iso-Buck converter should be no more than one half of the minimum input voltage. For example, at the minimum V_{IN} of 36 V, the primary output voltage (V_{OUT1}) should be no higher than 18V. The isolated output voltage VOUT2 is set by selecting a transformer with a turns ratio (N_1:N_2 = N_{PRI}:N

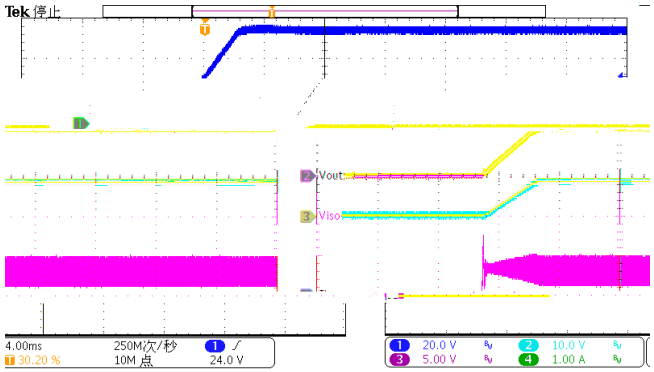
Tek 停止
Vout
Viso
4.00ms
30.20 %
250M次/秒
10M 点
24.0 V
20.0 V
10.0 V
5.00 V
1.00 A

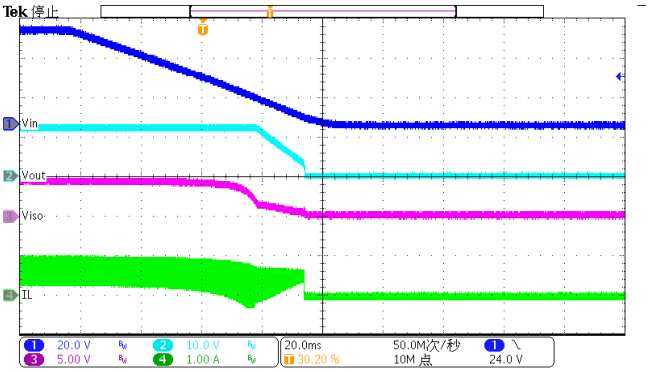
Tek 停止
Vin
Vout
Viso
IL
20.0 V
10.0 V
5.00 V
1.00 A
20.0ms
30.20 %
50.0M次/秒
10M 点
24.0 V

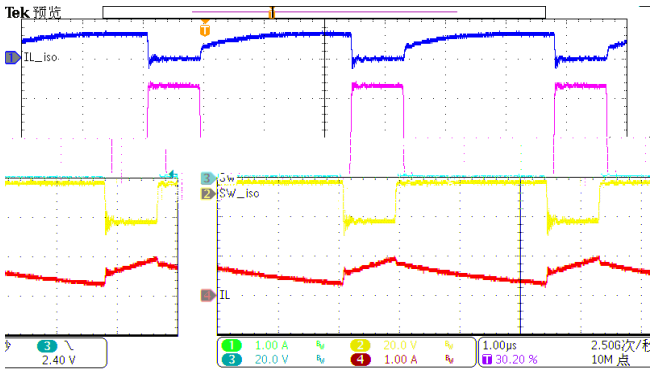
Tek 预览
IL_iso
Sw
Sw_Iso
IL
2.40 V
1.00 A
20.0 V
1.00 A
1.00µs
30.20 %
2.50G次/秒
10M 点

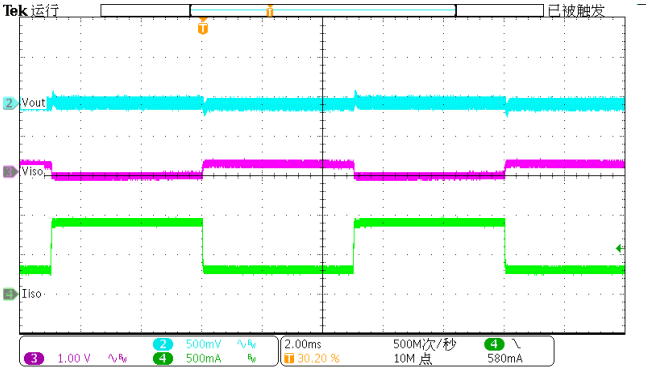
Tek 运行
已被触发
Vout
Viso
Iiso
1.00 V
500mV
500mA
2.00ms
30.20 %
500M次/秒
10M 点
580mA

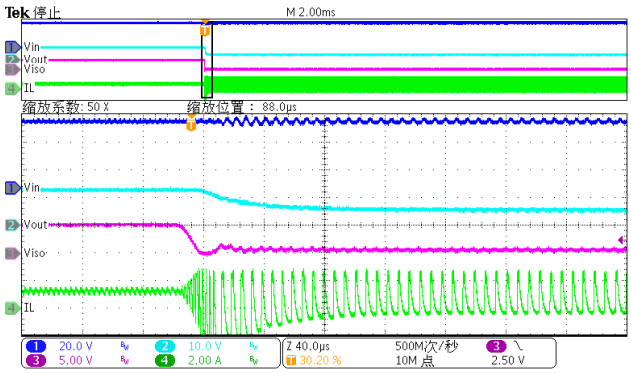
Tek 停止
M 2.00ms
Vin
Vout
Viso
IL
缩放系数: 50 X
缩放位置： 88.0µs
20.0 V
10.0 V
5.00 V
2.00 A
40.0µs
30.20 %
500M次/秒
10M 点
2.50 V

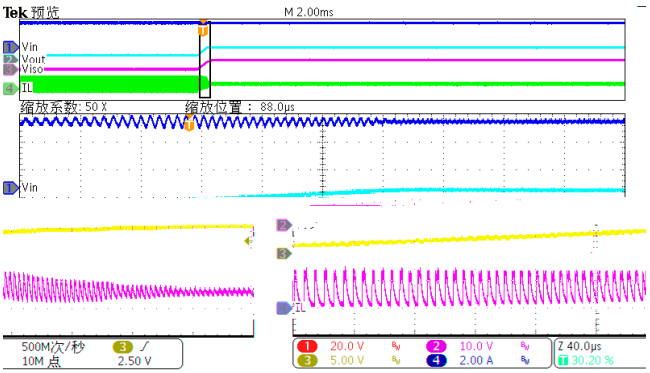
Tek 预览
M 2.00ms
Vin
Vout
Viso
IL
缩放系数: 50 X
缩放位置： 88.0µs
500M次/秒
10M 点
2.50 V
20.0 V
10.0 V
5.00 V
2.00 A
40.0µs
30.20 %

1.

2.

3.

4.

5.

6.

7.

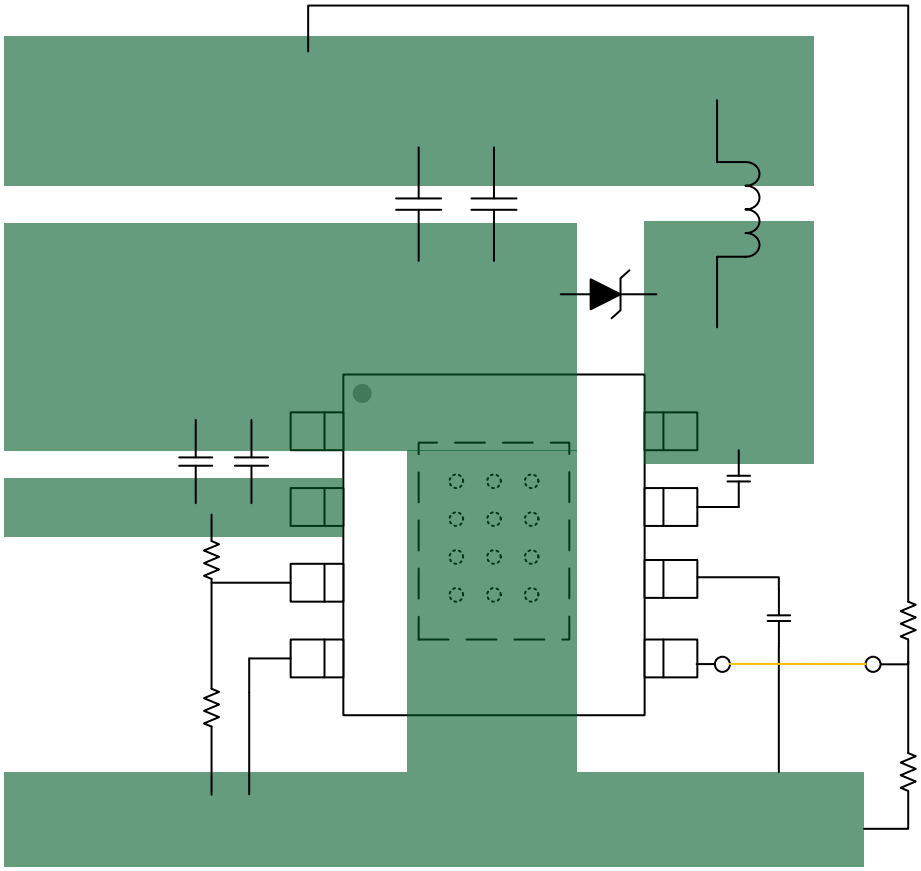

PACKAGE INFORMATION

θ				
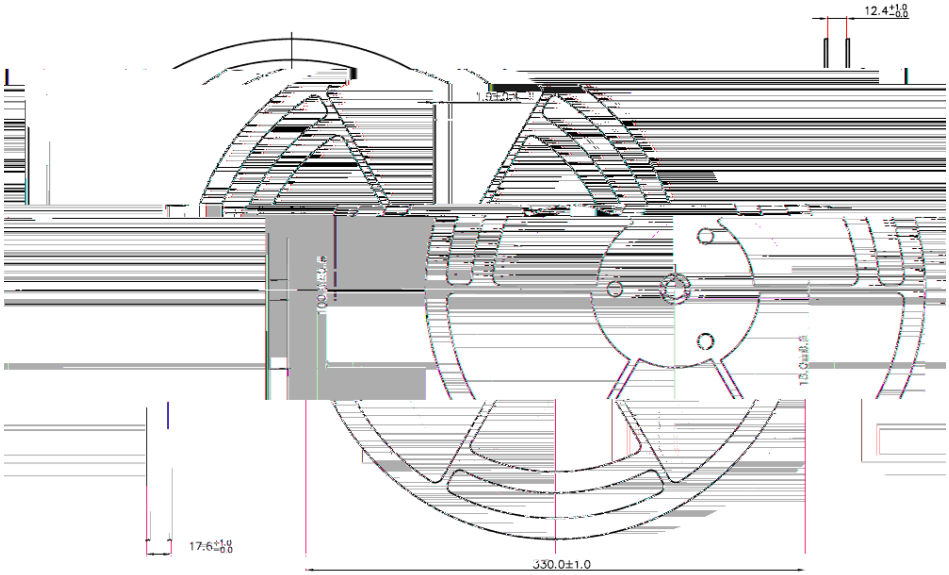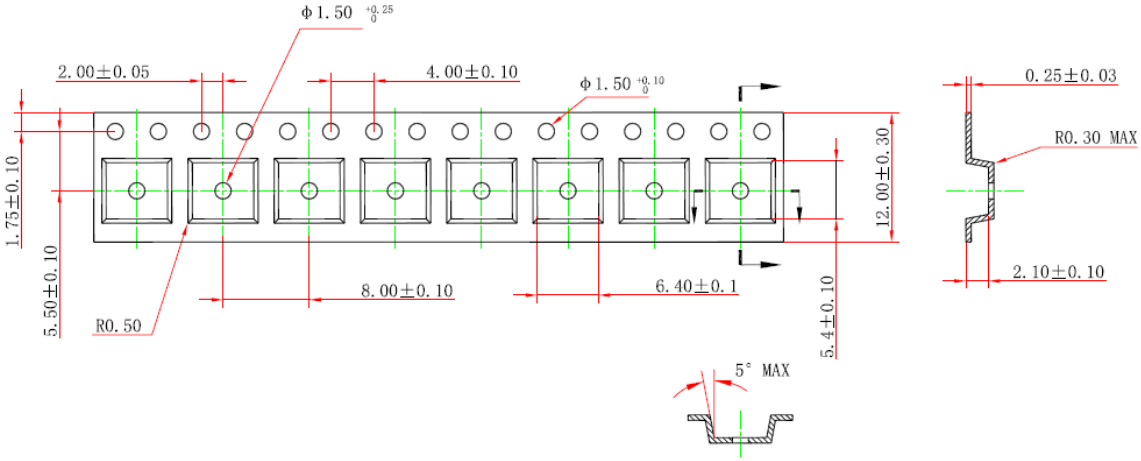
TAPE AND REEL INFORMATION