Over operating free-air temperature unless otherwise noted[1]

DESCRIPTION	MIN	MAX	UNIT
BST	-0.3	40	V
VIN, SW, EN	-0.3	34	V
FB	-0.3	5.5	V
Operating junction temperature[2]	-40	125	°C
Storage temperature T_{STG}	-65	150	°C

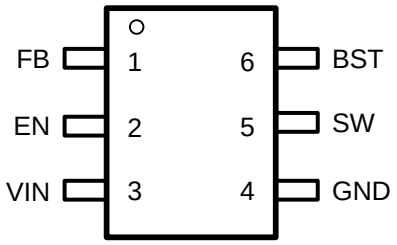

Top View: TSOT23-6L, Plastic

(1)

(2)

FB	1	Buck converter output feedback sensing voltage. Connect a resistor divider from VOUT to FB to set up output voltage. The device regulates FB to the internal reference of 0.8V typical.
EN	2	Enable logic input. Floating the pin enables the device. This pin supports high voltage input up to VIN supply to be connected VIN directly to enable the device automatically. The device has precision enable thresholds 1.18V rising / 1.1V falling for programmable UVLO threshold and hysteresis.
VIN	3	

BST	6	Power supply for the high-side power MOSFET gate driver. Must connect a 0.1uF or greater ceramic capacitor between BST pin and SW node.

(1)
(2)

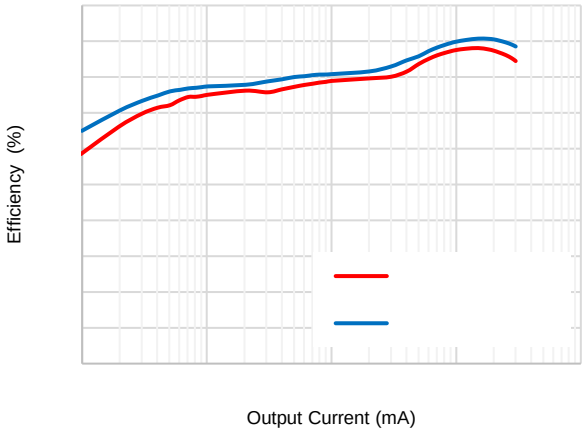
Efficiency (%)
Output Current (mA)

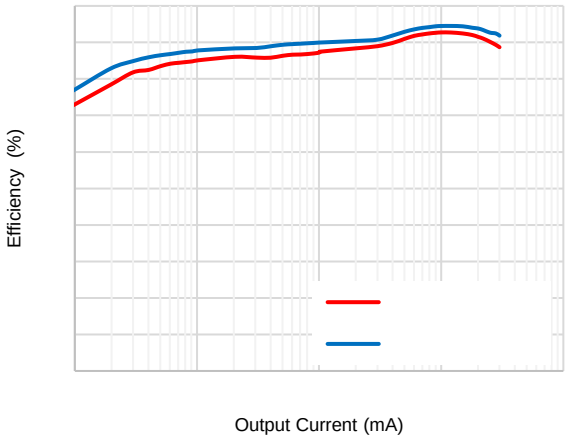
Efficiency (%)
Output Current (mA)

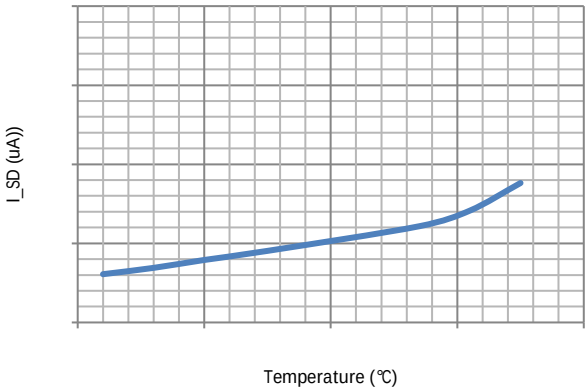
I_SD (uA))
Temperature (℃)

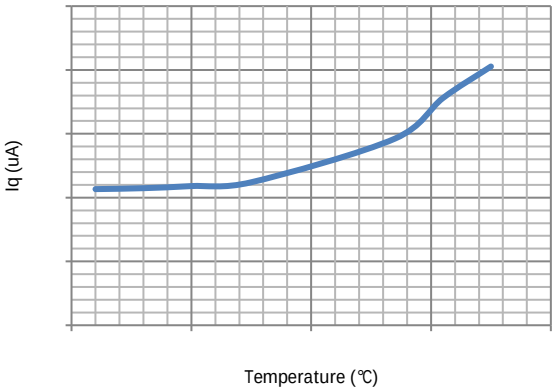
Iq (uA)
Temperature (℃)

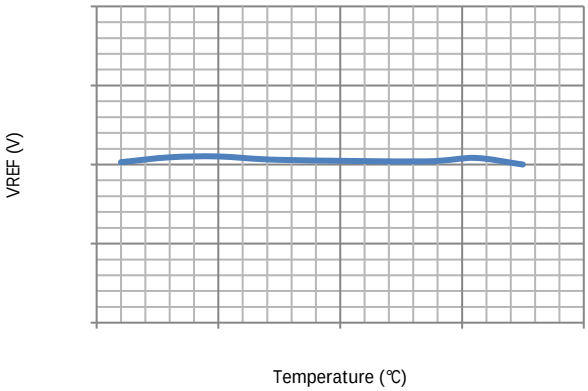
VREF (V)
Temperature (℃)

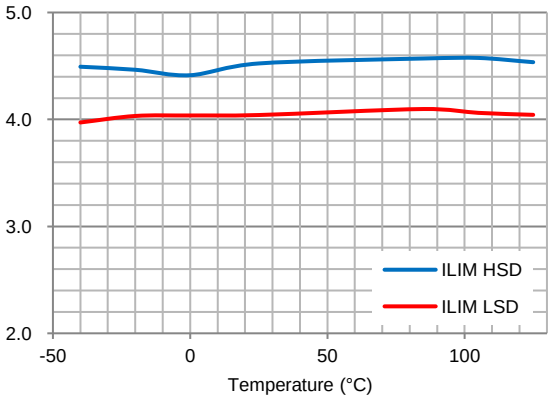
5.0
4.0
3.0
2.0
-50
0
50
100
Temperature (°C)
ILIM HSD
ILIM LSD

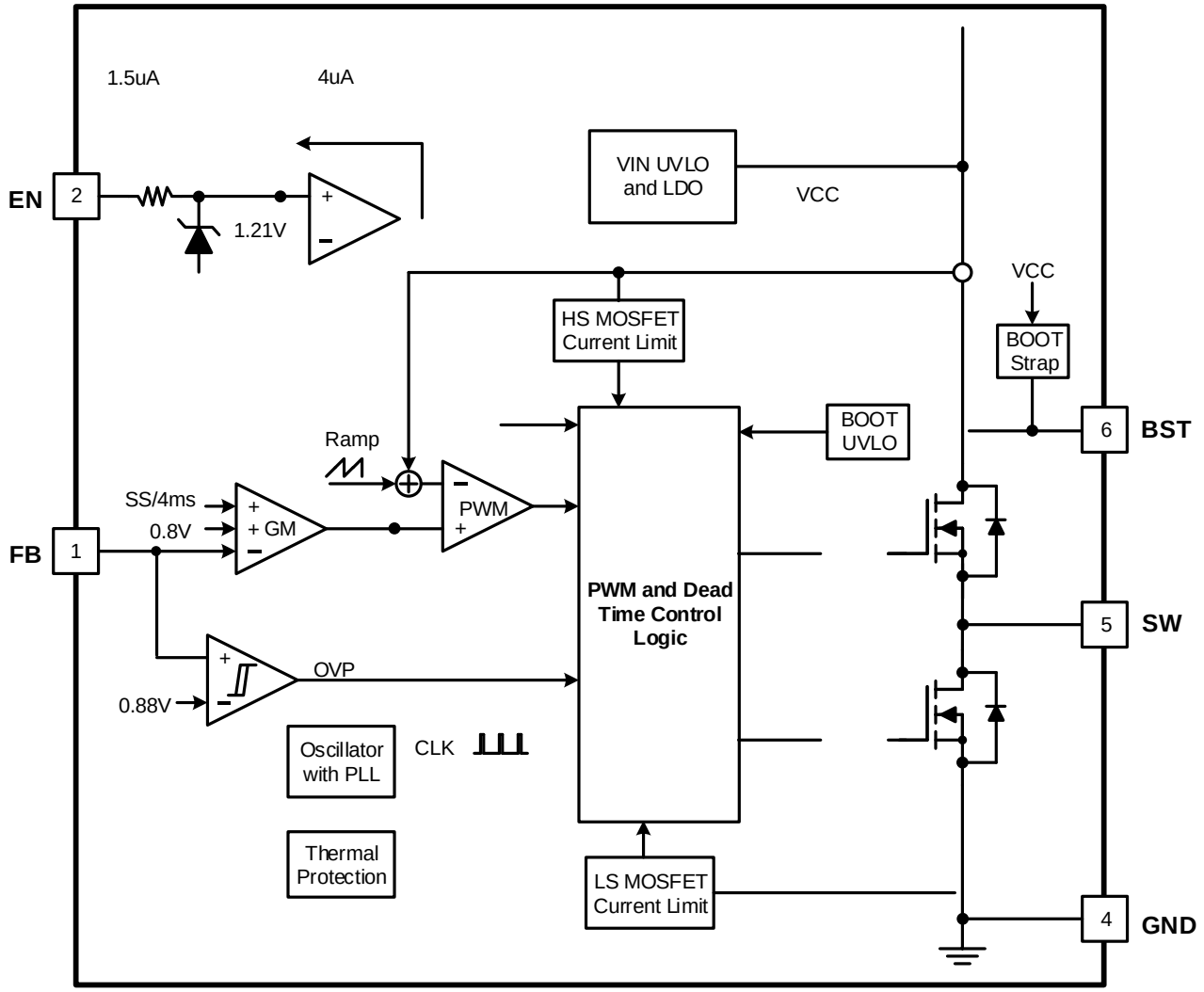
1.5uA
4uA
EN
2
1.21V
VIN UVLO and LDO
VCC
VCC
HS MOSFET Current Limit
BOOT Strap
BOOT UVLO
6
BST
Ramp
SS/4ms
0.8V
+ GM
PWM
FB
1
PWM and Dead Time Control Logic
5
SW
OVP
0.88V
Oscillator with PLL
CLK
Thermal Protection
LS MOSFET Current Limit
4
GND

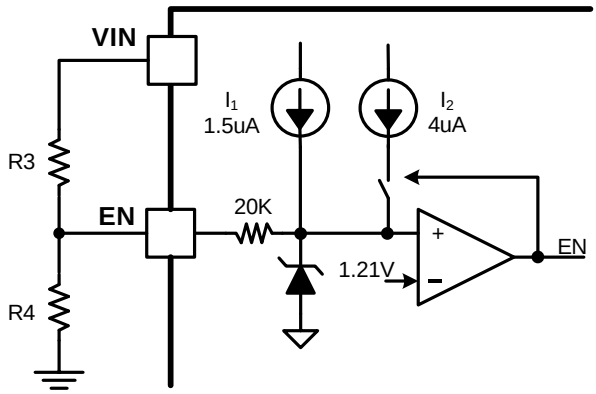

(1)

(2)

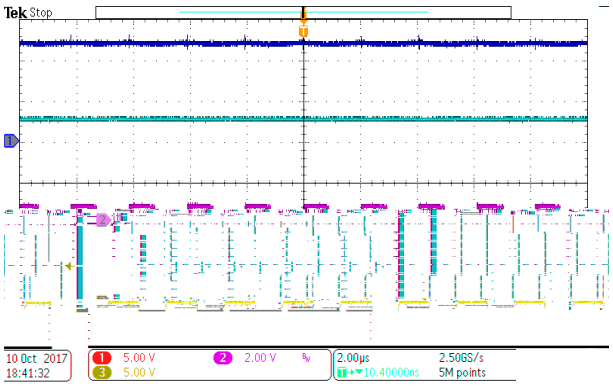
Tek Stop
10 Oct 2017
18:41:32
5.00 V
5.00 V
2.00 V
2.00µs
10.40000ns
2.50GS/s
5M points

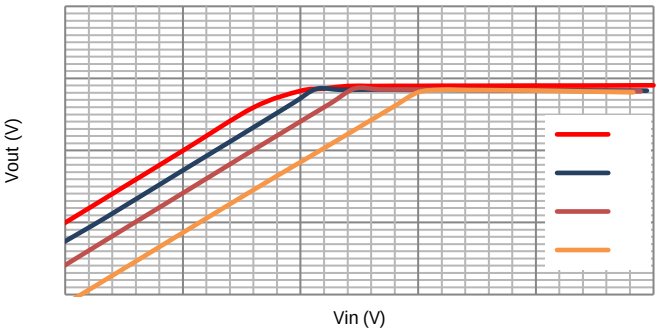
Vout (V)
Vin (V)

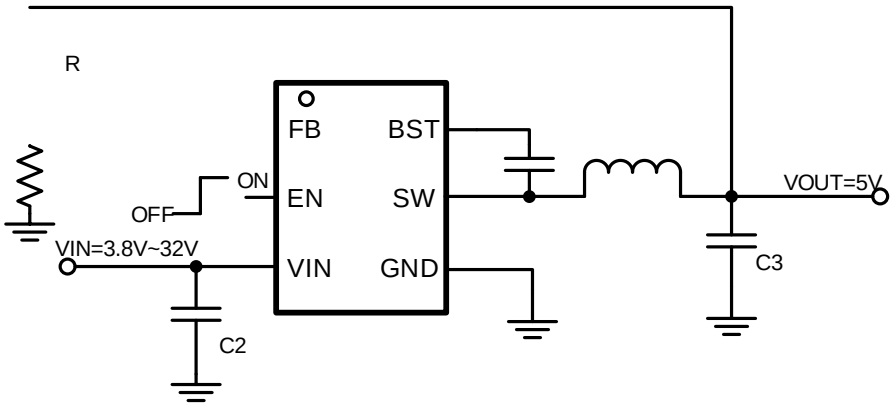

Design Parameters	Example Value
Input Voltage	24V
Output Voltage	5V
Output Current	3A
Output voltage ripple (peak to peak)	±0.3V
Switching Frequency	400kHz

(3)

-
-
-

(4)

-

(5)

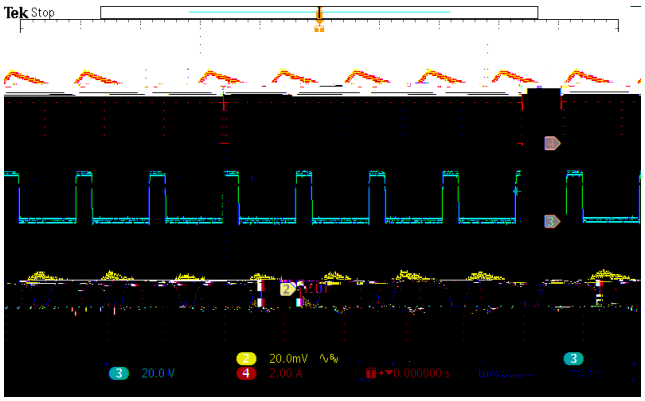

Figure 16. SW node waveform and Output Ripple
VIN=24V, IOUT=3A

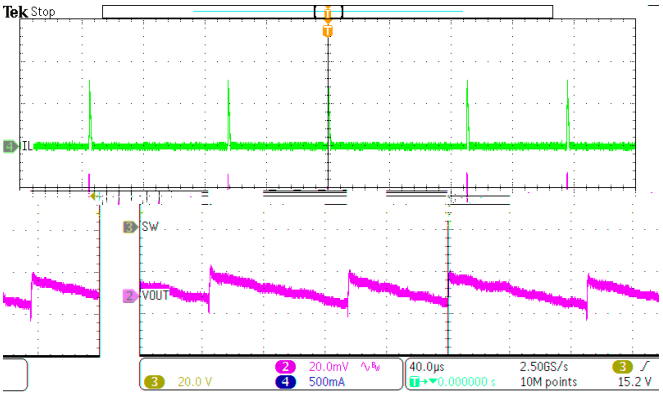

Figure 17. SW node Waveform and Output Ripple
VIN=24V, IOUT=10mA

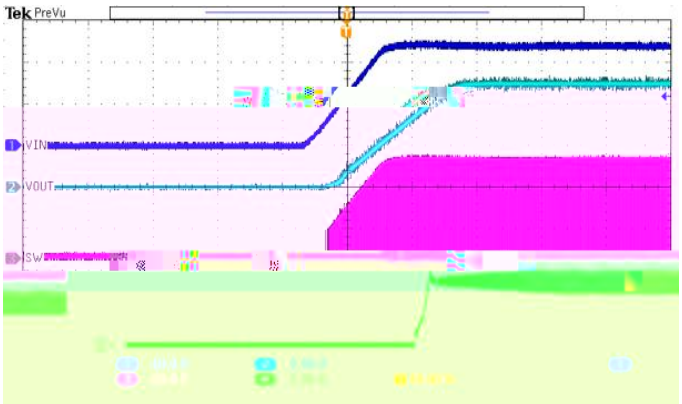

Figure 18. Power Up
VIN=24V, VOUT=5V, IOUT=3A

Figure 19. Power Down
VIN=24V, VOUT=5V, IOUT=3A

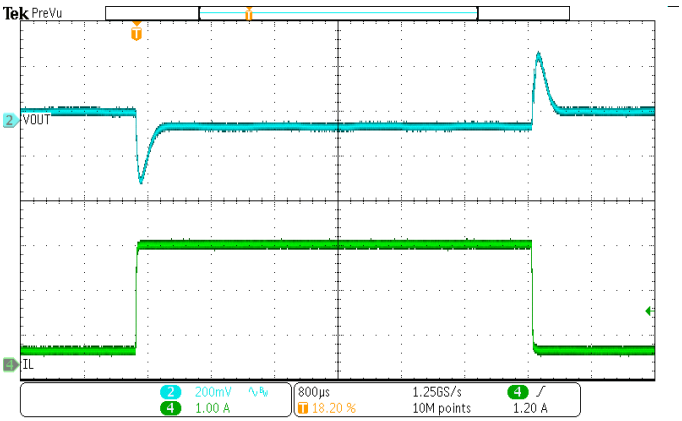

Figure 20. Load Transient
VOUT=5V, IOUT=0.3A to 2.7A, SR=250mA/us

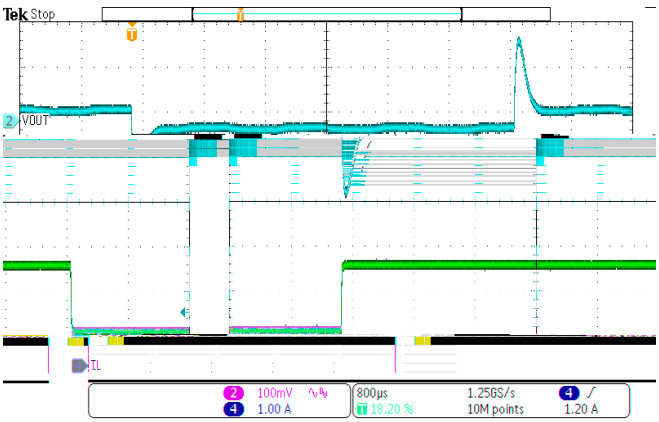

Figure 21. Load Transient
VOUT=5V, IOUT=0.75A to 2.25 A, SR=250mA/us

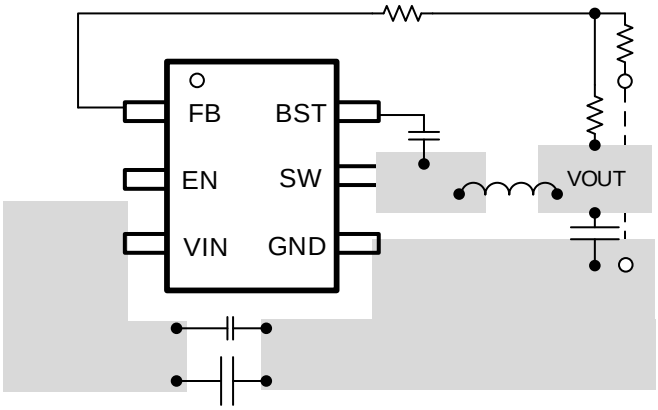

(12)

•
•

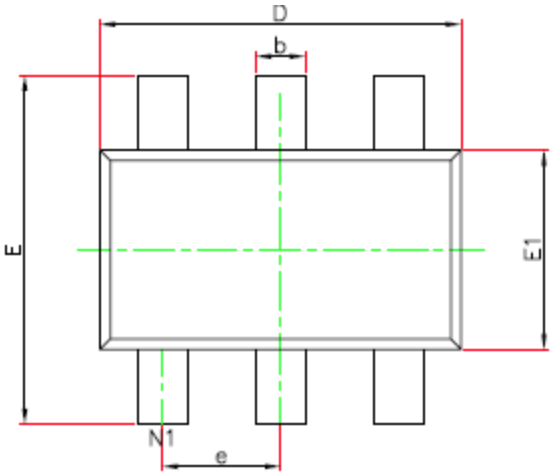

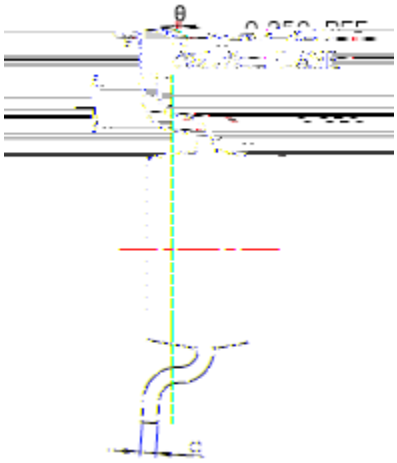

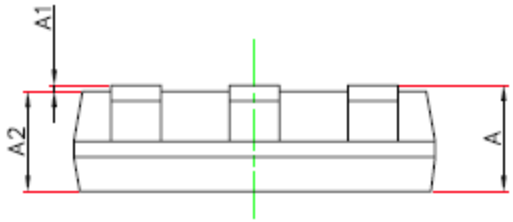

SYMBOL	Unit: Millimeter		
	MIN	TYP	MAX
A	-------		1.10
A1	0.000		0.10
A2	0.70		1.00
D	2.85		2.95
E	2.65		2.95
E1	1.55		1.65
b	0.30		0.50
c	0.08		0.20
e	0.95(BSC)		
L	0.30		0.60
	0		8

1.
2.
3.
4.
5.
6.

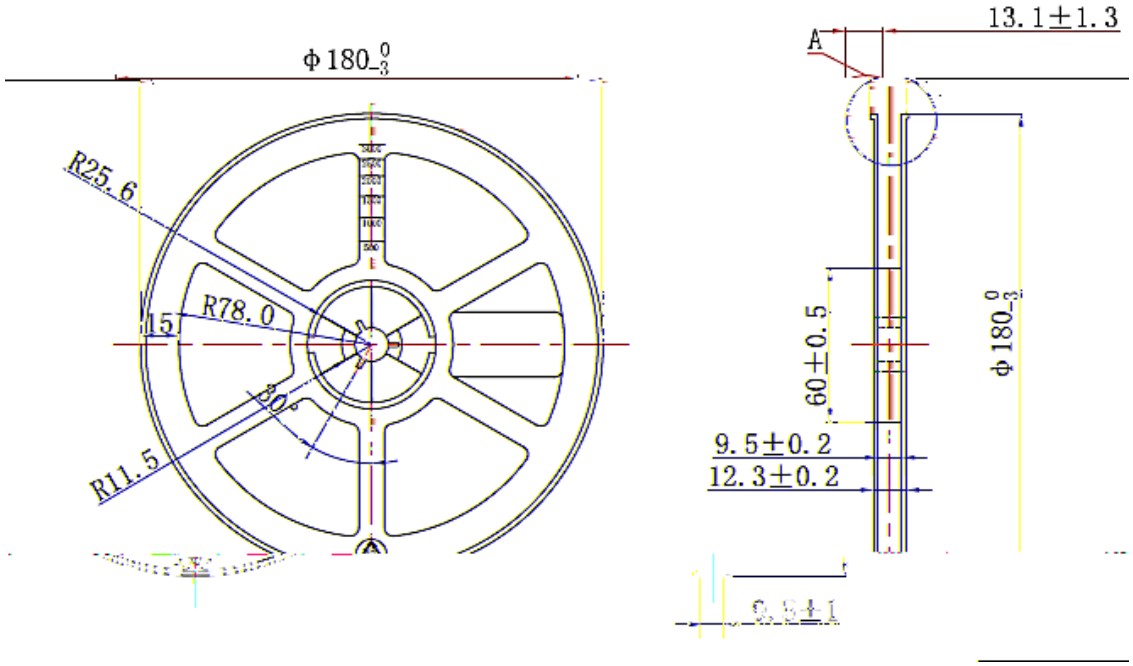
Φ180 0 -3
R25.6
15
R78.0
30°
R11.5
13.1±1.3
A
60±0.5
Φ180 0 -3
9.5±0.2
12.3±0.2

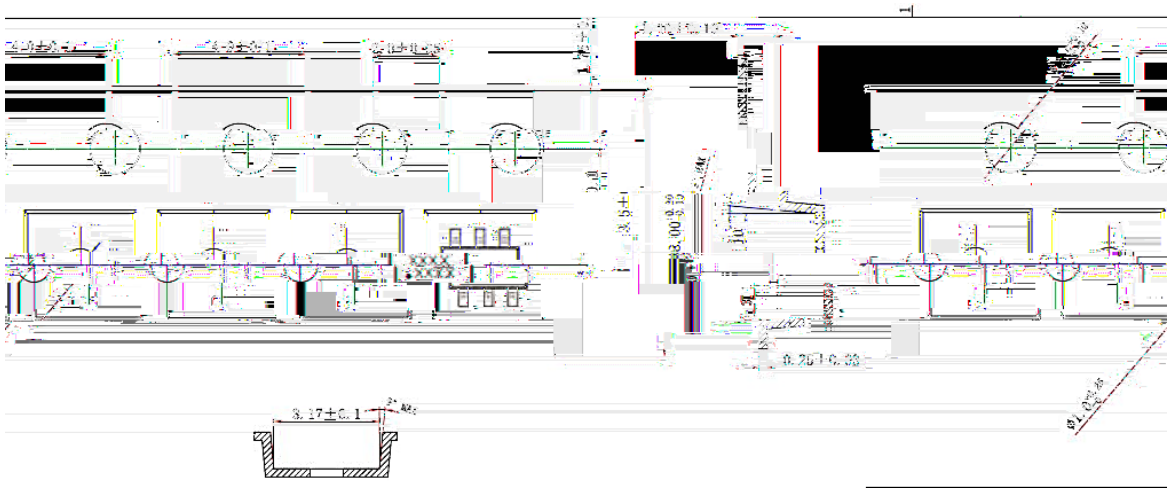
3.17±0.1
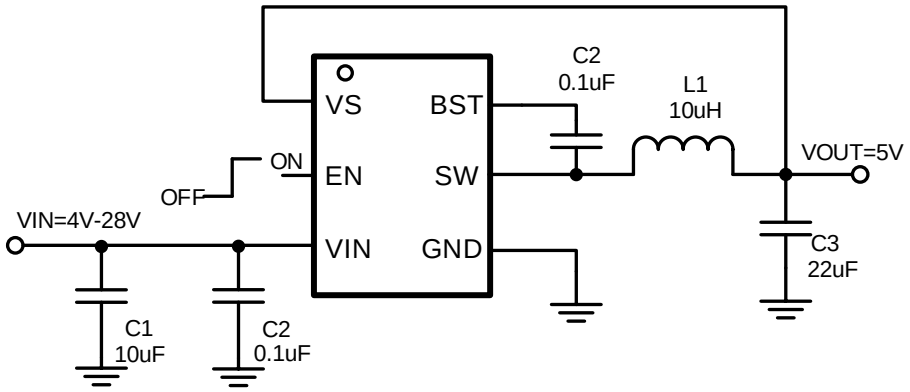
PN	DESCRIPTION	COMMENTS
SCT2320 **SCT2321**	3.8V-32V Vin, 2A Synchronous Step-down DCDC Converter with EMI Reduction	• 500KHz switching frequency • 2A Continuous output current • EMI reduction with switching node ringing-free. • Ultra-low quiescent current. High efficiency PFM at light load (SCT2320) • Frequency Spread Spectrum (SCT2320) • Fixed PWM mode for lower output ripple (SCT2321)
SCT2323 **SCT2325**	3.8V-32V Vin, 2A Synchronous Step-down DCDC Converter with EMI Reduction	• 1100KHz switching frequency • Fixed output 3.3V (SCT2323)/5V (SCT2325) • 2A Continuous output current • EMI reduction with switching node ringing-free. • Ultra-low quiescent current. High efficiency PFM at light load • Frequency Spread Spectrum
SCT2331	3.8V-32V Vin, 3A Synchronous Step-down DCDC Converter with EMI Reduction	• 400KHz switching frequency • 3A Continuous output current • EMI reduction with switching node ringing-free. • Fixed PWM mode for lower output ripple