REVISION HISTORY

HI N 4J a_hog _lm i l jl_pic oml_pcmic hmg s c_l li g j a_hog _lmch nb_ oll_hnp_lmic h(

L_pcmic h +(* 4L_f_ m_ni G le_n(

L_pcmic h +(, 4 j j fc nic h q p_i lg m&oj n_ _ c c_h s olp_(

L_pcmic h +(- 4Oj n_L + h L, f of nic h p fo_ch j a_ ++(

L_pcmic h +(. 4Oj n_ PG= I L L CH I LG NC H(

DEVICE ORDER INFORMATION

ORDERABLE DEVICE	PACKAGING TYPE	STANDARD PACK QTY	PACKAGE MARKING	PINS	PACKAGE DESCRIPTION
M=N, +*MN L	N j_ L__f	. * * *	, +*	2	MI J 2

ABSOLUTE MAXIMUM RATINGS

l p_l i j_l nch a l__ ct n_g j_l nol_ ohf_mmi nb_lq cm_hi n_ "+

DESCRIPTION	MIN	MAX	UNIT

PIN CONFIGURATION

Figure 1. 8

MQ	2	L_aof ri l mq cn bcha i onj on(=i hh_ nMQ ri h_r n_lh f ji q_l ch o ri l
Nb_lg f J	3	B_ n cmmj nc h j rb i c_(f_ rlc ffs i hh_ nc h ri AH j ch(Gomm _ i hh_ n_ ri ali oh j f h_i h J= i l j li j_l i j_l nc h h i jncg ct_ rb_lg f j_l i lg h _(

RECOMMENDED OPERATING CONDITIONS

l p_l i j_l ncha l__ ct n_g j_l nol_l ha_ oh f_mmi rb_lq cn_hi n_

PARAMETER	DEFINITION	MIN	MAX	UNIT
P_{CH}	Ch j on pi fn a_l ha_	. (/	2/	P
P_{ION}	l onj on pi fn a_l ha_	* (2	, .	P
N_D	l j_l ncha cb h nc h n_g j_l nol_	. *	+, /	=

ESD RATINGS

PARAMETER	DEFINITION	MIN	MAX	UNIT
P_M	Bog h i s Gi _f"B G &j_l HMOD = DM * * + , * +. mj_ cc nc h& ff j ch m"+	,	%,	eP
	=b la_ _pc_ Gi _f"= G &j_l HMOD = DM * *, , * +. mj_ cc nc h& ff j ch m"+	* (/	%* (/	eP

(1) D = i og_hnD J+/ / mn n_mrb n/ * * P B G ffi q mm _g ho nol cha q cb mm h l M i hrli f j li _mm(
(2) D = i og_hnD J+/ 1 mn n_mrb n, / * P = G ffi q mm _g ho nol cha q cb mm h l M i hrli f j li _mm(

THERMAL INFORMATION

PARAMETER	THERMAL METRIC	ESOP-8	UNIT
L_D	Doh nc h ri g c_hnrb_lg fl_mcmn h _"+	. ,	=)Q
$L_{D=}$	Doh nc h ri m_rb_lg fl_mcmn h _"+	. / (2	

"+ M=N j li pc_mL D h L D= hog _lmi hfs ml_ _l_h _ri _mmcg n_cb h nc h n_g j_l nol_mi rb_ _pc_m(L D h L D= l_hi n b l n_lcmc i j e a_cm_f & oni g hs i rb_l msmm_g f_p_f b l n_lcmc mmo b mrb_ _mcah h f si oni rb_j lchn_ ct oc n i l "J= i h q bc b rb_M=N, +* cmg i ohn_ &rb_lg f j mct_& h _r n_lh f_hpct i hg_hn f ri lm(Nb_J= i l cm b_ nmche rb nc mmi f_l_ ri rb_f_ m h rb_lg f j i rb_M=N, +* (=b hacha rb_ _mcah i l i h caol nc h i rb_J= i l b ha_mrb_ _ cc_h si rb_b_ nmche h rb_l_i l_rb_ no f L D h L D=(

ELECTRICAL CHARACTERISTICS

P_{CH}7. 2P&N_D7 . * =x+, / =&nsj c fp fo_cmn_mm_ oh _l, / =(

SYMBOL	PARAMETER	TEST CONDITION	MIN	TYP	MAX	UNIT
Power Supply						
P_{CH}	l j_l ncha ch j on pi fn a_		. (/		2/	P
$P_{CHYOPFI}$	Ch j on OPFI Nbl_mbi f Bsmm_l_mcm	P_{CH} l cmcha		. (, . * *		P g P
$C_{MB\ H}$	Mbon i q h oll_hn li g P CH j ch	H7* &hi fi		-		
C_x	Koc_m _hn oll_hn li g P CH j ch	H fi ncha&hi fi &hi h mq cn bcha& l l N MQ 7/P		+* *		
Power MOSFETs						
$L_{MI\ HYB}$	Bcab mc_GI M Ni h l_mcmn h _	$P_{I\ I\ N}$ P_{MQ} 7/P		1/ *		g
$L_{MI\ HYF}$	Fi q mc_GI M Ni h l_mcmn h _			/ * *		g
Reference and Control Loop						

SYMBOL	PARAMETER	TEST CONDITION	MIN	TYP	MAX	UNIT
P_L	L _ _l_h _pi fn a_i		* (13,	* (2	* (2* 2	P
Enable and Soft-startup						
P_{HYB}	h f_bcab rbl_mbi f			+(, +		P
P_{HYF}	h f_fi q rbl_mbi f			+(* /		P
C_{HYF}	h f_j ch j off oj oll_hn	H7+P		+		
C_{HYB}	h f_j ch j off oj oll_hn	H7+(/ P		.		o
N_{mm}	Chn_lh fmi nmn lnmcg _			.		g m
Switching Frequency Timing						
L HA YLN	l_ko_h s l ha_ omcha LN g i _		- * *		2* *	eBt
MQ	Mq cn bcha l_ko_h s	L_{LN}7/ * * e "+	. , *	/ * *	0* *	eBt
N_{l} YGCH	G chcg og i mcg _	P_{CH}7+, P		, * *	, 0*	hm
Current Limit and Over Current Protection						
C_{GCGYJ}	FM GI M N ji mcmp_ oll_hnfcg cn	li g mi ol _ni l ch		* (2		
$N_{BG=OJ}$	Bc oj q cmcha mcg _	Hog _lmi mi nmn ln s f_m		1		s f_m
BG=OJ	Bc oj ons s f_			+, (/		
Protection						
P_{IPJ}	__ e i p_lpi fn a_q cb l_mj _ nni l_ _l_h _pi fn a_	P)P_L lcmcha P)P_L ffcha		++* +* /		
N_M	Nb_lg fmbon i q h rbl_mbi f	N_D lcmcha Bsmn_l_mcm		+01 - /		= =

TYPICAL CHARACTERISTICS

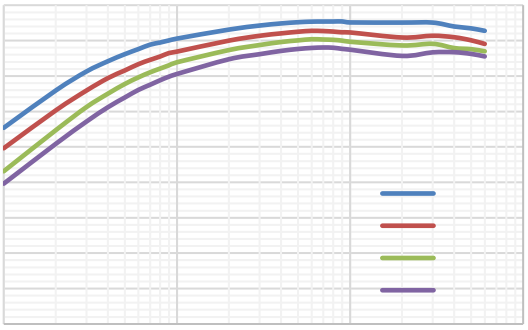

caol_, (cc_h spmFi =oll_hn"Pi on7/P

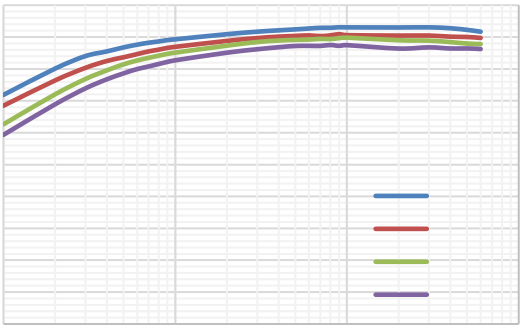

caol_-(cc_h spmFi =oll_hn"Pi on7+,P

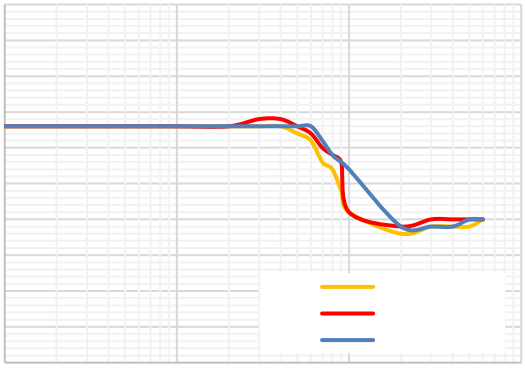

caol_. (Fi L_aof nch "Pi on7+,P

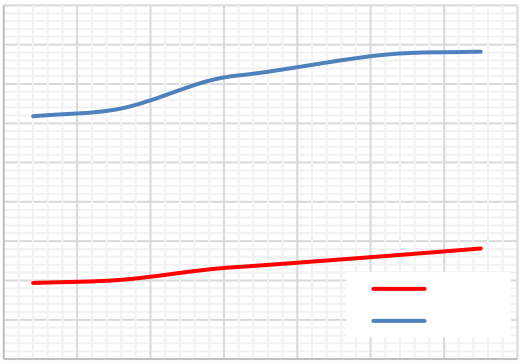

caol_/ l_ko_h spmN_gj_l nol_

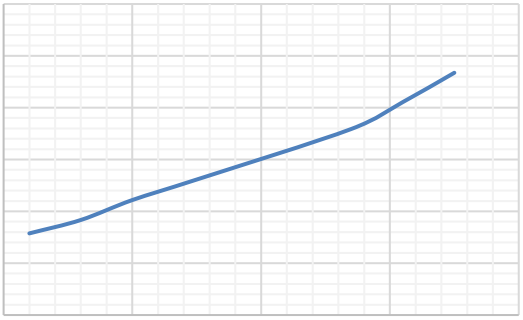

caol_0(Mbon iqh=oll_hnpmN_gj_l nol_

caol_1(@pmN_gj_l nol_

FUNCTIONAL BLOCK DIAGRAM

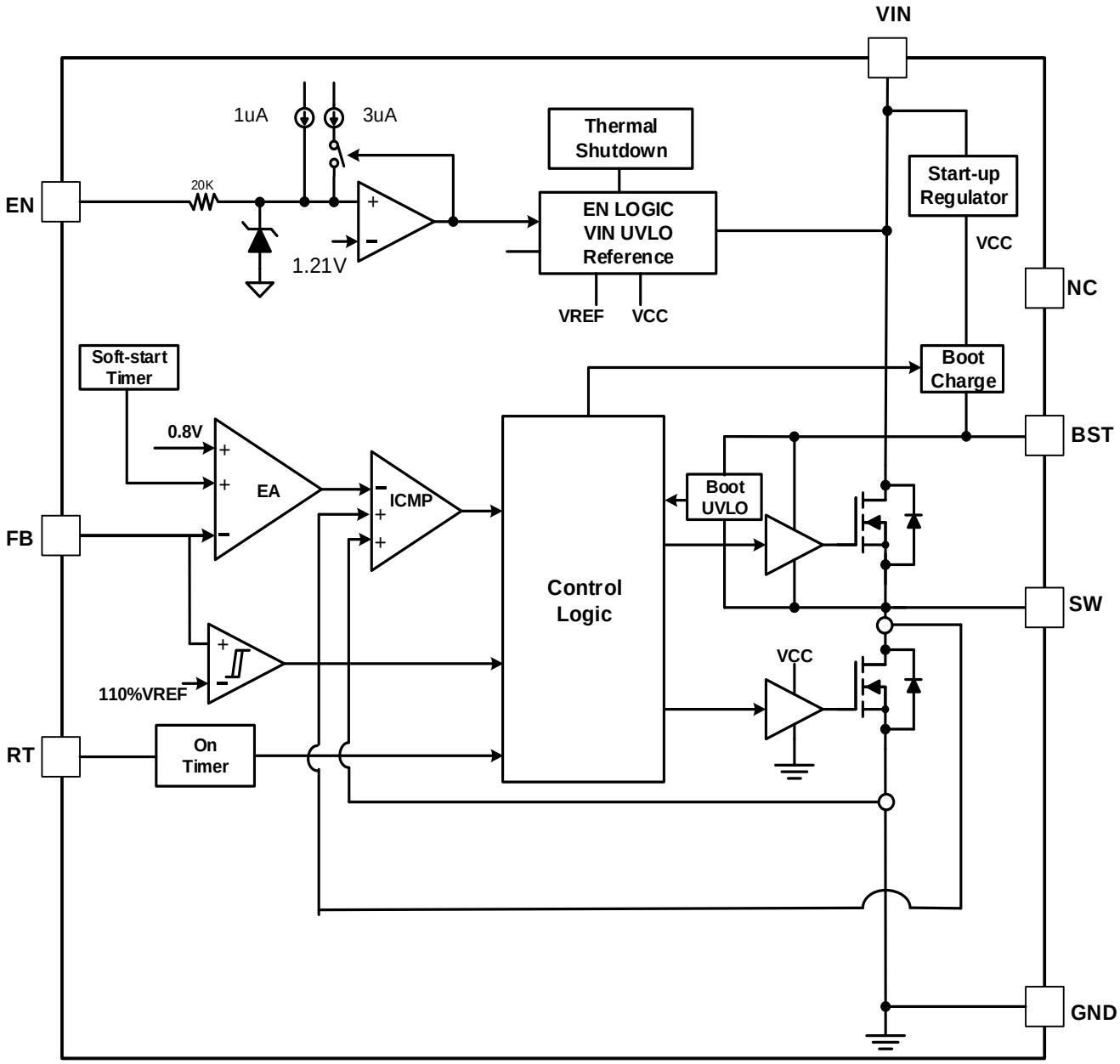

caol_2(oh nich f fi e cal g

OPERATION

Overview

Nb_ M=N, +* cm . (/P 2/P chjon&*(0 ionjon&chn_lh f i g j_hm n_ msh bli hi om o e i hp_ln_l qcb odfnch 1/*g L mi h bcab mc_ h /**g L mi h fi q mc_ ji q_l GI M Nm

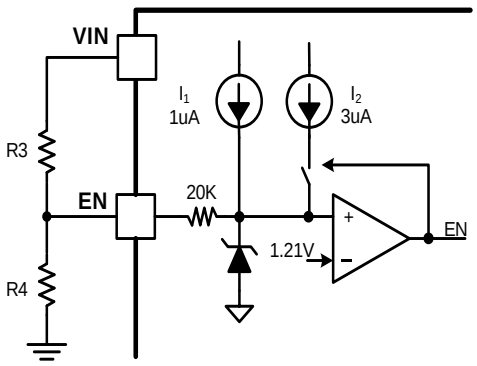

caol_3(Msmm_g OPFl s_h f_ qpc_

Qb_l_

Pmm ln4Pch lcm_rbl_mbi f ri _h f_rb_ _pc_
Pmmi j4Pch ffrbl_mbi f ri cm f_rb_ _pc_
C7+o
Ç7-o
P HL7+(, +P
P G 7+(*/P

Output Voltage

Nb_M=N, +* l_aof n_mrb_ chn_lh fl_ _l_h _pi fh a_ n*(2P qcb ±+ ri f_l h _ip_l rb_ij_l mchan_g j_l rol_ h pi fh a_ l ha_(Nb_ ionjonpi fh a_ cmm_n s l_mcmil qpc_l lig rb_ ionjonhi _ri rb_ jch(Ccm l_igg_h _ ri om_+ ri f_l h _il _m_l l_mcmilm(Om_ ko mch-ri f of n_l_mcmm h _i l_mcmil qpc_lm(Ni cg jlip_ _ cc_h s nfcabnfi m&fla_l p fo_l_mcmilm l_l_igg_h _(Biq_p_l&crb_p fo_m l_ri i bcab& rb_l_aofri lqdff _gi l_mom_jncf_ri hi cn_ _mchaionjonpi fh a_ ol s(

"-

qb_l_

- L YNI J cnrb_l_mcmil i hh_mcharb_ionjonri rb_ jch(
- L Y I N cnrb_l_mcmil i hh_mcharb_ jch ri rb_ali oh (

Internal Soft-Start

Nb_M=N, +* chn_al n_m h chn_lh fmi nmm ln d ocnrb nl g jmrb_l_ _l_h _pi fh a_ lig t_li pi fmri *(2P l_ _l_h _pi fh a_ ch. g m(Crb_ H jch cnjoff_ _fiq +(*/P&mqcnbchamri jm h rb_chn_lh fmi nmm lnl_m_m(Nb_mi nmm ln fmi l_m_m olchambonigh o_ri rb_lg fip_lfi cha(

Switching Frequency

Nb_mqcnbcha l_ko_h si rb_M=N, +* cmm_n s jf cha l_mcmil _mq__h LN jch h rb_ali oh (

Cl_mcmil m_mcha l_ko_h s gi _& l_mcmil jf _ _mq__h LN jch ri rb_ali oh m_mrb_mqcnbcha l_ko_h s ip_l qc_l ha_ lig -**EBt ri 2**EBt(LN jch cnhin ffiq_ ri _f_n fi mchail mbil n_ ri rb_ali oh (Om_ ko mch. il rb_jfi nch caol_+*(ri _n_l gch_rb_l_mcmm h _il mqcnbcha l_ko_h s h__ _(

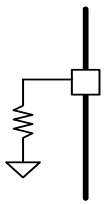

Qb_l_&

mq cnmqcnbcha fi e l_ko_h s

caol_+*(M_mcha l_ko_h s

(

Bootstrap Voltage Regulator

h_rn_lh f i i mml j j cil _nq__h l l N jch h MQ jch jiq_lmrb_ fi nchaa n_ lcp_l ni bcab mc_jiq_l GI M N(Nb_ i i mml j j cil pi fn a_cm b la_ lig h chn_al n_ pi fn a_l_aof ni l qb_h bcab mc_jiq_l GI M N cmi h fi q mc_jiq_l GI M N cmi h(

Over Current Limit and Hiccup Mode

Nb_ ch o ni l oll_hn cm g i hcil_ olcha fi q mc_ GI M N K, i h(Nb_ M=N, +* cg j f_g_hmm i p_l oll_hn jlin_ nich q cb s f_ s s f_fcg cchaf i q mc_GI M Np ff_s oll_hn h fi q mc_GI M Np ff_s oll_hnni pi c ch o ni l oll_hnlohhcha q s olcha oh_r j_n_ i p_lfi i l i onjonb l mbi ln i h cnich(

Over voltage Protection

Nb_ M=N, +* cg j f_g_hmmrb_l p_l pi fn a_ Jlin_ nich l PJ cl ocls ni g chcg ct_i onjonpi fn a_i p_lmbi i n olcha fi rl hmc_hn&l_i p_lcha lig i onjon ofn i h cnich i l fcabn fi rl hmc_hn(Nb_i p_lpi fn a_ i g j l ni l ch l PJ cl ocn i g j l_mrb_ jch pi fn a_ ni rb_chn_lh fl__l_h _pi fn a_(Qb_h pi fn a_ _r __ m++* i chn_lh f *(2P l__l_h _pi fn a_&rb_bcab mc_GI M N nolhmi ni pi c i onjonpi fn a_ i hmcho_ni ch l_ m_(Qb_h rb_ jch pi fn a_ ffm _fi q +*/ i rb_*(2P l__l_h _pi fn a_&rb_bcab mc_GI M N h nolh i h a ch(

Thermal Shutdown

Nb_ M=N, +* jlin_ mmrb_ _pc_ lig rb_ g a_ olcha_r _mmcp_b_ n h jiq_l cmmj nich i h cnich m(l h _ rb_ cbh nich n_g j_l nol_ _r __ m+01=&rb_ chn_lh f rb_lg f m_hmi l mni jm jiq_l GI M Nmmq cn bcha(Qb_h rb_ cbh nich n_g j_l nol_ ffm _fi q +-, =&rb_ _pc_l_mn lmmq cb chn_lh f mi nmn lnj b m_(

APPLICATION INFORMATION

Typical Application

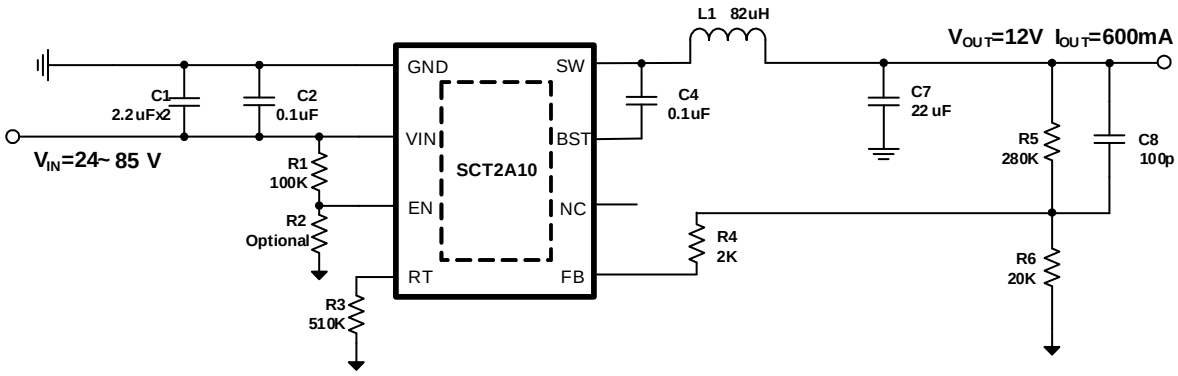

Figure 11. SCT2A10 Design Example, 12V Output with Programmable UVLO

Design Parameters

Design Parameters	Example Value
Ch jonPi fn a_	. 2P Hi lg f , . P ni 2/P
I onj onPi fn a_	+, P
G r cg og I onj on=oll_hn	0**g
Mq cn bcha l_ko_h s	/** EBt
I onj onpi fn a_lcj j f_"j_ e ni j_ e	/*gP
NI hmc_hnL_mj i hm_0*g ni /.*g fi mm_j	Pi on7.**gP

Output Voltage

Nb_ionjonpifha_cnm_n s h_rn_lh fl_mcmil qpc_l L/ h L0 dh nsjc f jjfc nich mb_g nc(L_igg_h _ L0l_mcmh _cn+*(,E (Om__ko nich /ni fofn_L/(

___ "/

qb_l_4

- PL cnrb_ __ el__l_h _pifha_&nsjc f *(2P

Table 1. R_5, R_6 Value for Common Output Voltage (Room Temperature)

V_{OUT}	R_5	R_6
-(- P	0-(/ E	,* E
/ P	+*/ E	,* E
+, P	,2* E	,* E
,. P	/2* E	,* E

Under Voltage Lock-Out

h_rn_lh fpifha_ qpc_l h_nqilei L+ lig rb_dhjonni Hjdh

- P_{ION} cmrb_i onjonpi fn a_
- P_{CH} cmrb_chjonpi fn a_

Mch _rb_ch o ni l oll_hnlcjjf_ch l_ m_mqcrb rb_chjonpi fn a_&mi rb_g rcgog chjonpi fn a_ch jjfc nich cm fq smom_ ni f of n_rb_g chcgog ch o n h _l_kocl_ (Om_ ko nich 3 ni f of n_rb_ch o n h _p fo_(

Nb_pifna_lmchai rb_chjon j cil gomm _al_ n_lrb hrb_g rcgog chjonpifna_(h rb_ j cil gomm fmi b p_ lcjjf_ oll_hnl mchaal_ n_lrb hrb_g rcgog chjon oll_hnlcjjf_(Nb_ LGM oll_hnchrb_chjon j cil

Application Waveforms

Pch7. 2P&Pi on7+, P&ohf_mmi nb_lq cn_hi n_

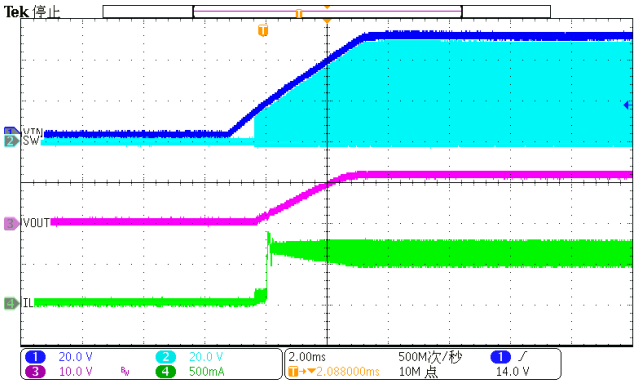

caol_+, (Ji q_l oj

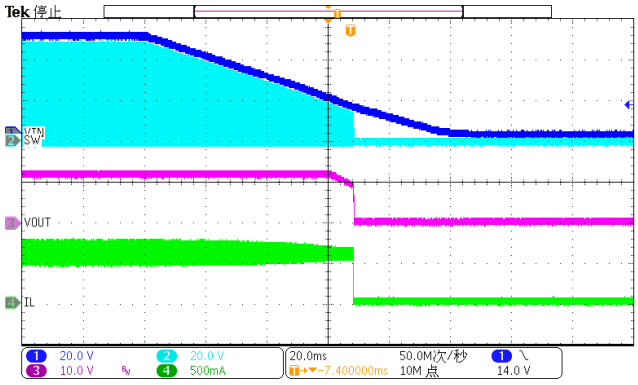

caol_+-(Ji q_l iqh

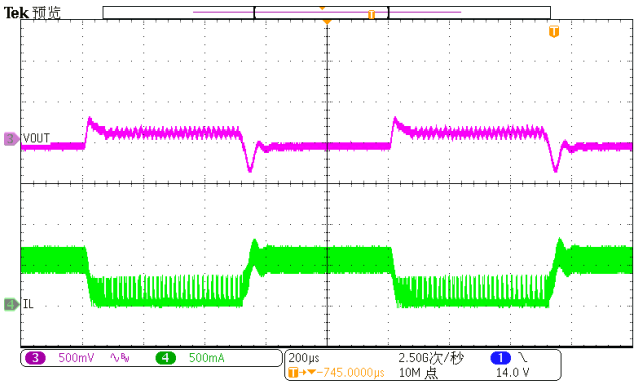

caol_+. (Fi NI hmc_hn"*(*0 *(/. &*(, /)om

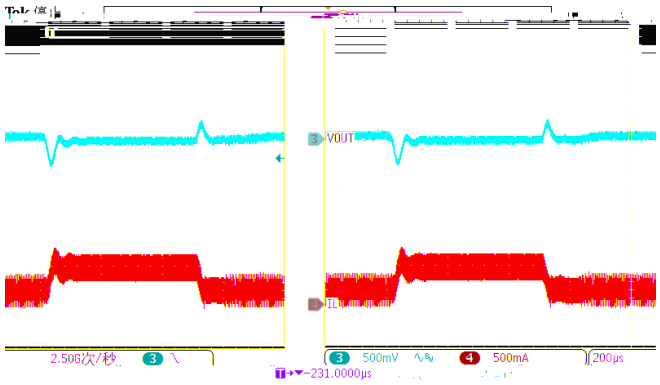

caol_+/(Fi NI hmc_hn"*(+/ *(. / &*(, /)om

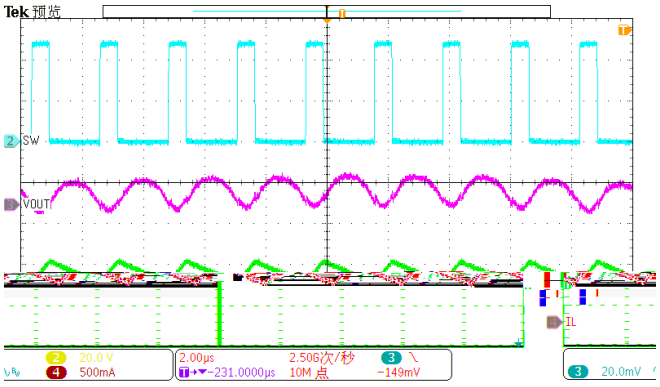

caol_+0(MQ h Pi onLcjj f_

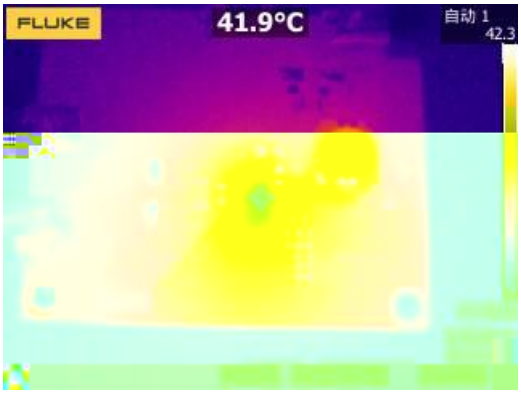

caol_+1(Nb_lg f& 2PCH&+, Pi on&*(0

Typical Application Circuit

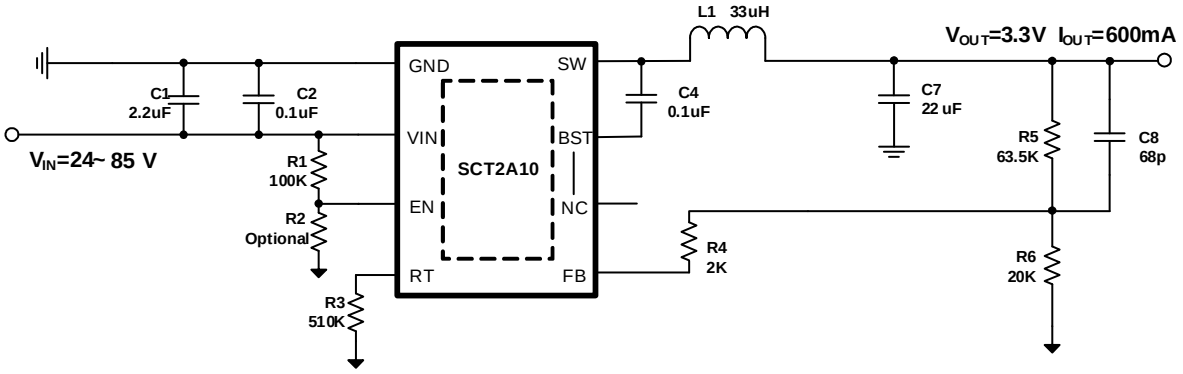

Figure 18. VOUT=3.3V, IOUT=0.6A Application Circuit

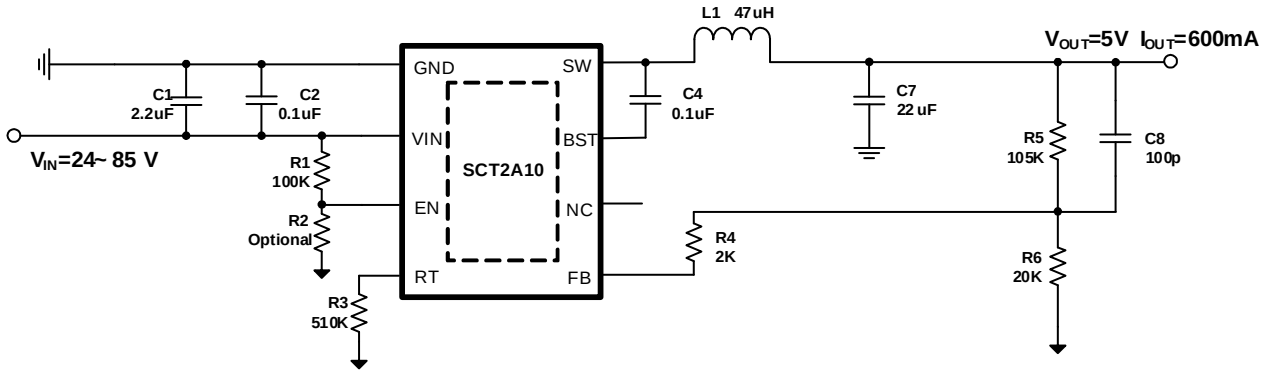

Figure 19. VOUT=5V, IOUT=0.6A Application Circuit

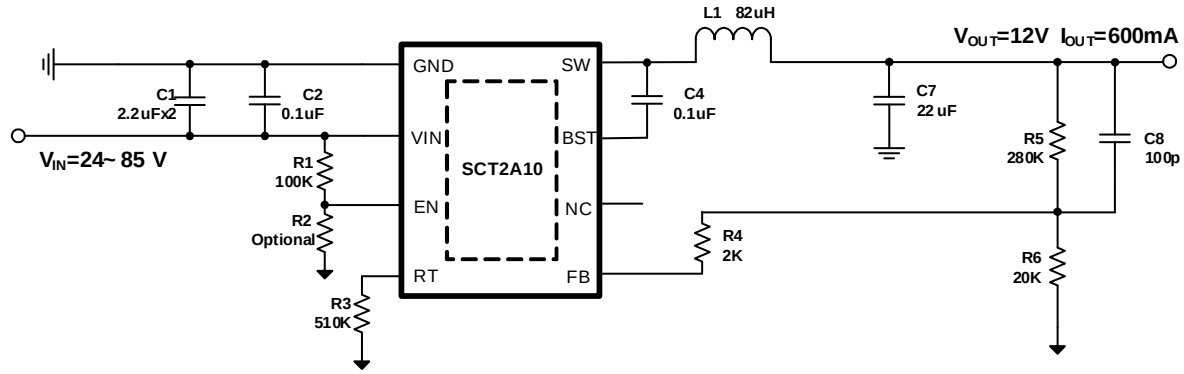

Figure 20. VOUT=12V, IOUT=0.6A Application Circuit

Layout Guideline

Jli j_l J= f si on cn lcc f i l M=N, +* mmn f_ h _ c c_hni j_l nc h(Nb_rl _m i h o ncha mnmq cn bcha oll_hnmi l pi fn a_m l_ _ ms ri chn_l nq cb mnl s ch o n h _ h j l mcc j cn h _ ri a_h_l n_ hi cn_ h _al _ j_l i lg h _(i l _m_l l_mofm&i ffi q rb_m_ aoc _fch_m m _fi q 4

PACKAGE INFORMATION

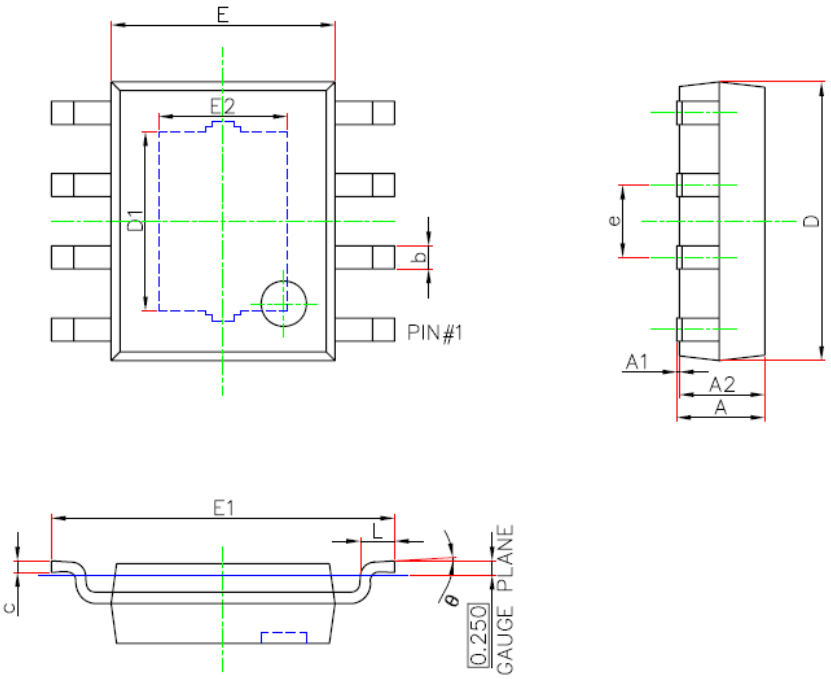

MI J2)JJ"3/r+-* J e a_l onfch_ cg_hmichm

Msg if	cg_hmichmch Gdffcg_n_lm		cg_hmichmch Ch b_m	
	Gch(	G r(	Gch(	G r(
	+(-**	+(1**	*(*/+	*(*01
+	*(***	*(+**	*(***	*(**.
,	+(-/*	+(//*	*(*/-	*(*0+
	(--	*(/+*	*(*+-	*(*,*
	(+1	*(,/*	*(**1	*(*+*
	.(1**	/(+**	*(+2/	*(,*+
+	-(*/*	-(,/*	*(+,*	*(+,2
	-(2**	.(***	*(+/*	*(+/1
+	/(2**	0(,**	*(,,2	*(,..
,	,(+0*	,(-0*	*(*2/	*(*3-
_	+(,1*" M=		*(*/*" M=	
F	*(.**	+(,1*	*(*+0	*(*/*
θ	*	2	*	2

NOTE:

1. l qchajlijim_ ni _g _ D = j e a_ionfch_Gl ,,*p lcnich(
2. l qchahinni m f_(
3. ffch_ l cg_hmichm l_ch gdffcg_n_lm(
4. Nb_lg fj mb ff _mif_l_ ihrb_ i l (
5. cg_hmichmi _rjim_ j ih imigi j e a_ i hinch fo _gif f mb(
6. =ihn nJ= i l lc nich ilgchcgog mif_lg meq_ nif_l h _m _nq__hrb_jchm(

TAPE AND REEL INFORMATION

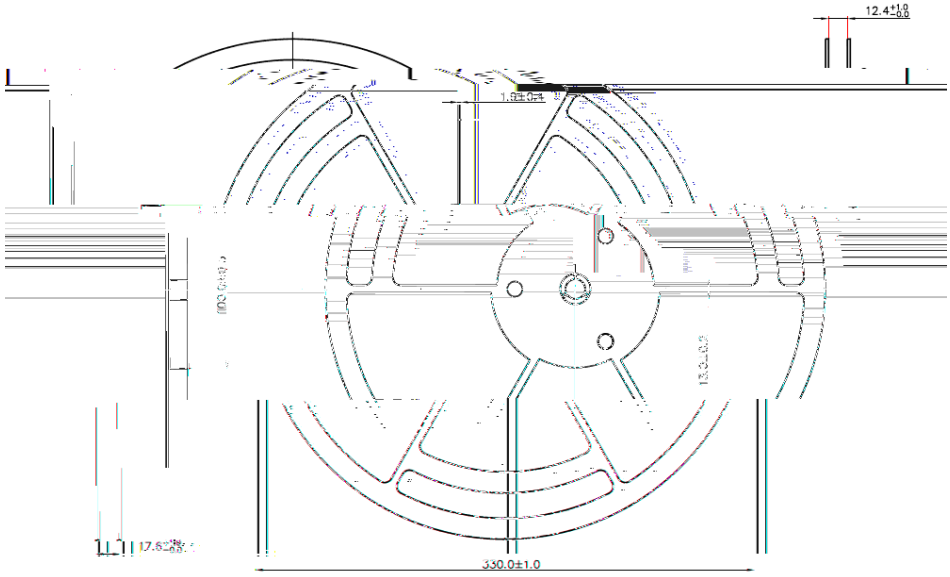

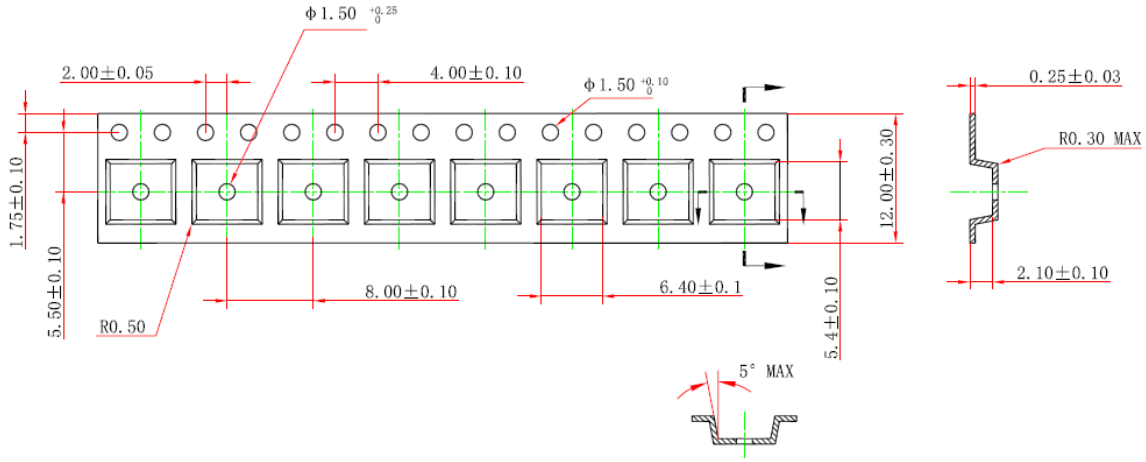

NOTICE: Nb_ch i l g nic h ch rbcm i og _hn cmmo d_ nri b ha_q cbi onhi nc _(Om_lmmbi of q ll hn h ao l hn__rb_rbdc j lns Chn_ff_ no f Jli j_lns lcabmm l_hi nch lcha_ oji h q b_h chn_al ncha Mdfci h =i hn_hnN_ bhi fi as "M=N j li o mmchni hs j j fc nic h(M=N q dffhi n mmog _ hs f_a fl_mji hmc dfcs i l hs m c j j fc nic hm(