5.5V-100V Vin, 1.8A Peak Current Limit, High Efficiency Asynchronous Step-down DCDC Converter

LKG XKY

- F XST 8 _dc AP VT) E E
- <PgX d dc_dcE dPVT) E
- 0 2 cXd db dc_dc2 daaT c
- 0 TPZ2 daaT c X Xf WT E+% E
- 8 cTVaPcTS (& 7 XWB XST f Ta< B54C
- (d0 dXbRT c2 daaT c
- E 5TTSQPRZ ATUTaT RT E dPVT
- b 8 cTa P B UcbcPacCX T
- 5XTS Bf XRWXV 5aT dT Rh Pc (: 7i
- 2 C 2 ca < ST f XW 8 cTVaPcTS _ 2 _T bPcX
- aTRXX 4 PQT CWaTbW S U a a VaP PQT 8 _dcE dPVT D STaE dPVT RZ dc a cTRcX DE CWaTbW S P S 7hbcTaTbX
- 2hRT Qh 2hRT 2 daaT c X XXV
- eTaE dPVT a cTRcX
- eTaCT _TaPcdaT a cTRcX
- 0 ePXPQT X P 4B PRZPVT

GVVRQI G QUTYF

- E 3 XcaXQdcTS f Ta 3 T XTah 1 db
- 1 PccTah <P PVT T cBhbcT T 1 XT BR cTa
- < c a 3 aXTb 3 a Tb

KYI XOV QUTF

CWT B2C 0 & X P Pbh RWa db QdRZ R eTaTaf XW f XST X_dc e dPVT aP VXV Ua E c E f WRW PRR SPcTb P ePaXch UbcT_ S f P__XPcX b PZXV X XSTP U a Pdc cXT XSdbcah P S XWcXV P__XPcX b CWT B2C 0 & XcTVaPcTb P (& WXW bXT < B54C P S WPb 0 _TPZ dc_dc RdaaT c X X f WT E+% E c bd__ acWXW _TPZ RdaaT cP__XPcX

CWT B2C 0 & PS _cXV cWT R bdP c cX T 2 C ST R ca f XW XcTVaPcTS _ R _T bPcX VaTPch bX _XXb cWT R eTaTa UURWX_R UXdaPcX

CWT B2C 0 & UTPcdaTb d bT 5aT dT Rh < Sd PcX 5< ST Pc XWc PS f XW ch_XP (d0 f dXbRT c RdaaT c f WRW T PQTb cWT R eTaTa c PRWXeT cWT WXW_ f Ta TUURXT Rh SdaXV XWc PS a PS R SX b

CWT B2C 0 & UTab RhRT Qh RhRT RdaaT c X X cWTa P bWdcS f _a cTRcX dc_dc eTae dPVT _a cTRcX P S X_dc e dPVT d STae dPVT _a cTRcX CWT STeXT X PePXPQT X P _X cWTa P h T WP RTS 4B _PRZPVT

F

VQI GRIG VVRQI G QUTF

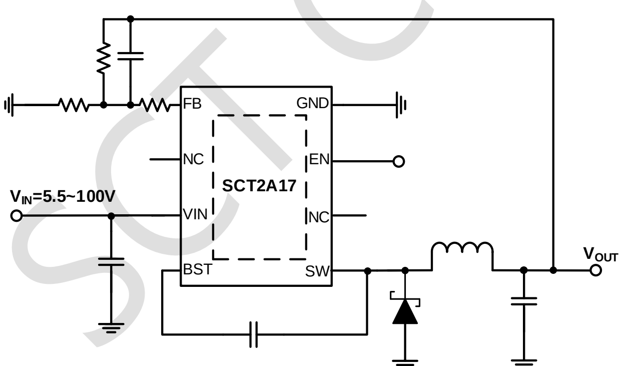

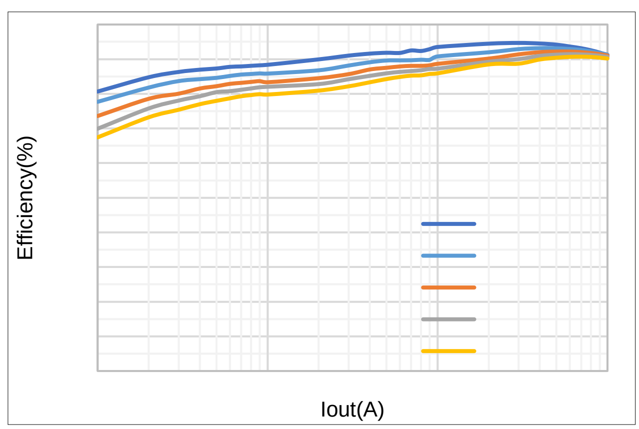

SCT CONFIDENTIAL

XK OYOUTENOY UX EF

= C4) PVT d QTab U a_aTeXdb aTeXbX b Ph SXbUTaUa _PVT d QTab X cWT RdaaT ceTabX

ATeXbX)2dbc TaBP _T

ATeXbX)D_SPcT 3 4E 82 4 A3 4A 8=5 A< 0C8 =

K OI KEUX KXEOTLUXSG OUTEF

SCT CONFIDENTIAL

XKIUS S KT K FUVKXG OTMH UT O OUTYF

eTa _TaPcXVUaTT PXacT _TaPcdaT aP VT d Tbb cWTaf XbT cTS

E8=	8 _dce cPVT aP VT			E
E DC	dc_dce cPVT aP VT			E
C9	_TaPcXVYd RcX cT _TaPcdaT			2

KY EXG OTMYF

E 4B3	7d P 1 Sh < ST 71< _Ta0=B894342 9B b_TRXXRPcX P _Xb			ZE
	2 WPaVTS 3 TeXRT < ST 2 3< _Ta0=B894342 9B b_TRXXRPcX P _Xb			ZE

(1) 94342 S Rd T c94 bcPcTb cWPc E 71< P f b bPUT P dUPRcdaXVf XcWP bcP SPaS 4B3 R ca _a RTbb

(2) 94342 S Rd T c94 &bcPcTb cWPc E 23< P f b bPUT P dUPRcdaXVf XcWP bcP SPaS 4B3 R ca _a RTbb

NKXS GREOTLUXS G OUTF

A 90	9d RcX c P QXT ccWTa P aTbXbcP RT	(	2 F
9C	9d RcX c c _RWPaPRcTaXPcX _PaP TcTa		
91	9d RcX c Q PaS RWPaPRcTaXPcX _PaP TcTa	&	
A 92c _	9d RcX c RPbT cWTa P aTbXbcP RT	& ((	
A 91	9d RcX c Q PaS cWTa P aTbXbcP RT	(	

B2C _a eXSTb A 90 P S A 92 d QTab h Pb aTUTaT RT c TbcX PcT Yd RcX cT _TaPcdaTb UcWT STeXRTb A 90 P S A 92 PaT cP RWPaPRcTaXbcXR U_PRZPVT XbTU Qdc U P h cWTabhbcT TeT RWPaPRcTaXbcXRb bdRWPb cWT STbXV P S Ph dc UcWT _aXcTS RXaRdXc Q PaS 21 f WXRWcWT B2C 0 &Xb d cTS cWTa P _PS bXT P S TgcTa P T eXa T cP UPRc ab CWT 21 Q PaS Xb P WTPcbXZ cWPcXb STaTS c cWT TPSb P S cWTa P _PS UcWT B2C 0 & 2 WP VXV cWT STbXV aR UXVdaPcX UcWT 21 Q PaS RWP VTb cWT TUURXT Rh UcWT WTPcbXZ P S cWTaTU aT cWT PRcdP A 90 P S A 92

SCT CONFIDENTIAL

VCI GRHI NGXGI KXOY CI YF

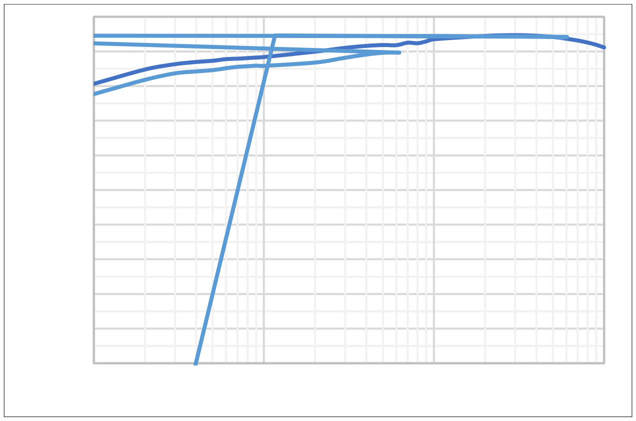

5XdaT 4UJRX Rh eb PS 2daaT c E dc E

5XdaT 4UJRX Rh eb PS 2daaT c E dc E

5XdaT PS ATVd PcX EX, E E dc E

5XdaT PS ATVd PcX EX, E E dc E

5XdaT % XT ATVd PcX 8 dc 0

5XdaT & Bf XRWXV 5aT dT Rh eb EX E dc E

F

SCT CONFIDENTIAL

L TI OUTGRHRUI F OGMXGS F

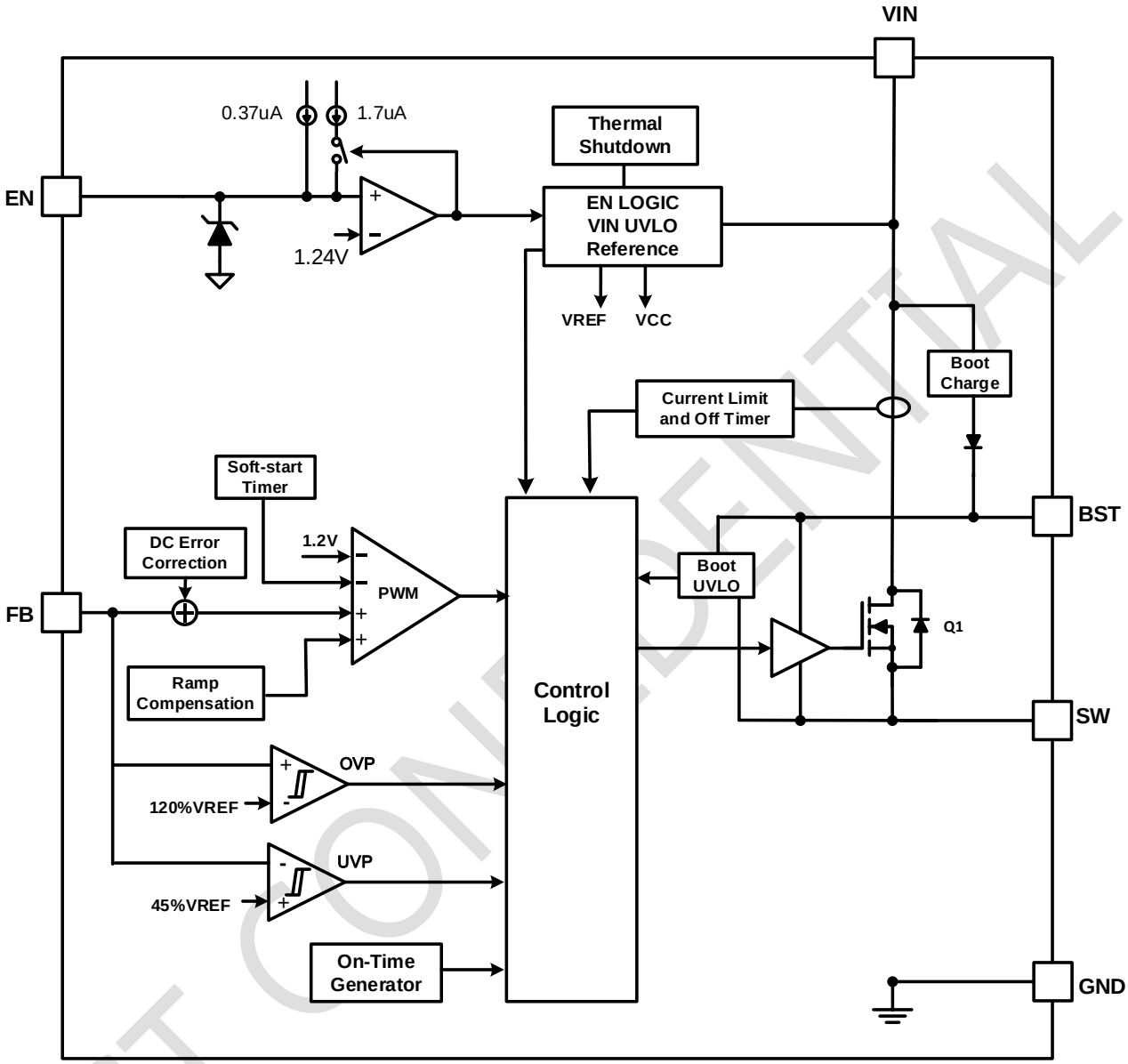

F

5XdaT 5d RcX P 1 RZ 3 XRVaP

SCT CONFIDENTIAL

CWT B2C 0 & aTVd PcTb cWT XcTa P aTUTaT RT e cPVT Pc E CWT dc_dce cPVT Xb bTc Qh P aTbXbc aSXeXSTaUa cWT dc_dc STc cWT 51 _X 8cXb aTR T STSc dbT c TaP RT aQTccTaaTbXbc ab DbT 4 dPcX c RP RdPcT aTbXbP RT UaTbXbc aSXeXSTab C X _a eT TUURXT Rh Pc XWc PSb PaVTaeP dT aTbXbc ab PaT aTR T STS 7 f TeTa XUcWT eP dTb PaT c WXWW cWT aTVd Pc af X QT aT bdbRT_cXQT c XbT PUUTRcXV dc_dce cPVT PRRdaPRh

——

f WTaT

- A51NC Xb cWT aTbXbc aR TRcXV cWT dc_dcc cWT 51 _X
- A51N1 c Xb cWT aTbXbc aR TRcXV cWT 51 _X c cWT Va d S

CWT B2C 0 & XcTVaPcTb P XcTa P b UcbcPac RXaRdXc cWPc aP _b cWT aTUTaT RT e cPVT Ua i Ta e cb c E aTUTaT RT e cPVT X b 8UcWT 4= _X Xb _d TS QT f E bf XRWXV bc _b P S cWT XcTa P b UcbcPac aTbTcb CWT b UcbcPac P b aTbTcb SdaXV bWdcS f SdT c cWTa P eTa PSXV

0 TgcTa P Q cbcaP_ RP_PRX aQTcf TT 1 C _X P S BF _X _ f Tab cWT U PcX V VPcT SaXeTac WXWbXST _ f Ta < B54C CWT Q cbcaP_ RP_PRX ae cPVT Xb RWPaVTS Ua P XcTVaPcTS e cPVT aTVd Pc af WT WXWbXST _ f Ta < B54C Xb UU

SCT CONFIDENTIAL

RXRdXR _PaTb cWT 51 _X e cPVT c cWT XcTa P aTUTaT RT e cPVT F WT 51 e cPVT TgRTTSb UXcTa P E aTUTaT RT e cPVT cWT WXWbXST < B54C cda b UUc Pe XS dc_dce cPVT R cXdT c XRaTPbT F WT cWT 51 _X e cPVT UP b QT f UcWT E aTUTaT RT e cPVT cWT WXWbXST < B54C RP cda PVPX

CWT B2C 0 & _a cTRb cWT STeXRT Ua cWT SP PVT SdaXV TgRTbbXT WTPcP S _ f TaSXbX_PcX R SXX b RT cWT Yd RcX cT _TaPcdaT TgRTTSb 2 cWT XcTa P cWTa P bT b abc _b _ f Ta< B54Cb bf XRWXV F WT cWT Yd RcX cT _TaPcdaT UP b QT f 2 cWT STeXRT aTbcPacb f XcWXcTa P b UcbcPac_WPbT

SCT CONFIDENTIAL

GVVRCI G OUTFOTLUXS G OUTF

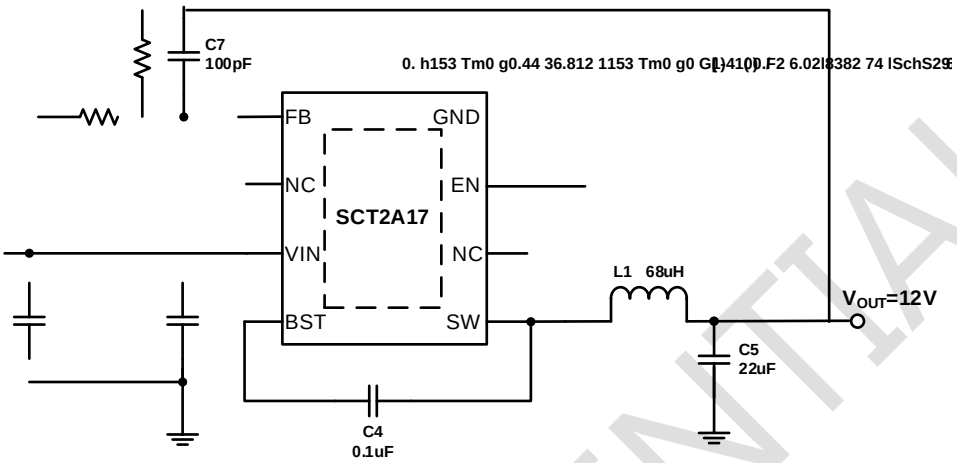

8 _dcE dPVT	E = a P E c E
dc_dcE dPVT	E
< PgX d dc_dc2 daaT c	0
Bf XRWXV 5aT dT Rh	(: 7i
dc_dce dPVT aX _T _TPZ c _TPZ	E
CaP bXT cATb_ bT 0 c & 0 PS bcT_	E dc, %(E

SCT CONFIDENTIAL

CWT dc_dce dPVT X bTcQh P TgcTa P aTbXc aSXeXSTa A P S A X dh_XRP P__XRPcX bRWT PcXR ATR T STS A aTbXdP RT X : DbT 4 dPcX c RPRd PcT A

f WTaT)

- E A45 X cWT UTTSQPRZ aTUTaT RT e dPVT U E

0 TgcTa P e

Table 1. R_1, R_2 Value for Common Output Voltage (Room Temperature)

E	(:	:
E	& :	:
E	(:	:

SCT CONFIDENTIAL

SCTC

CWT SXST dbcPb QT bT TRcTS f XWP P__a _aPcT _ f TaaPcXV CWT SXST R SdRcb cWT dc_dcRdaaT cSdaXV cWT UUcX T UcWT XcTa P _ f Tabf XRW CWT UUcX T UcWT XcTa P bf XRWX P Ud RcX UcWT PgX d X_dc e cPVT cWT dc_dce cPVT P ScWT bf XRWXVUaT dT Rh CWT dc_dcRdaaT cSdaXV cWT UUcX T X d cX_XTS Qh cWT Uaf PaS e cPVT UcWT SXST c RP Rd PcT cWT XbcP cP T db R SdRcX bbTb UcWT SXST 0c WXWTabf XRWXV UaT dT RXb cWT PR bbTb UcWT SXST TTS c QT cPZT Xc PRR d c CWT PR bbTb UcWT SXST PaT SdT c cWT RWPaVXVP S SXRWPaVXV UcWT Yd RcX RP_PRXP RT P S aTeTabT aTR eTah RWPaVT 4 dPcX X dbTS c RP Rd PcT cWT c cP _ f TaSXbX_PcX XRdSXVR SdRcX bbTb P S PR bbTb UcWT SXST

CWT BB 1 SXST WPb P Yd RcX RP_PRXP RT U _5 DbXV 4 dPcX cWT c cP bb X cWT SXST PccWT PgX d X_dce cPVT X F

8UcWT _ f Tabd__h b_T Sb P bX XRP cP d c UcX T Pc XWc PS RdaaT cb a X b TT_ ST R bXSTadbXV P SXST f WRWWPb P f TPZPVT RdaaT cP S b XWch WXWTaUaf PaS e cPVT Sa _

CWT X_dcRdaaT cc cWT bcT_S f 3232 R eTacTaX SXR cXd db cWTaUaT XaT dXTb P RP_PRXc ac bd__h cWT 0 2 RdaaT cc cWT bcT_S f 3232 R eTacTaf WXT PXcPXXV cWT 3 2 X_dce cPVT DbT RP_PRXc ab f XWG A aG&A SXT TRcaXb PaT dbdP h bdVVTbcTS QTRPdbT UcWTXa f 4BA P Sb P cT _TaPcdaT R TUURXT cb P S X X bca Vh aTR T STS c dbT P cWTa f TaeP dT RP_PRXc a T V d5 f XWb P _PRZPVT bXT % c UXcTa WXWUaT dT Rh bf XRWXV XT PRT cWT b P bXT RP_PRXc aPb R bT c E8= P S 6 = 3 _Xb Pb _ bbXQT

CWT e cPVT aPcXV UcWT X_dcRP_PRXc a dbc QT VaTPcTacWP cWT PgX d X_dce cPVT 0 ScWT RP_PRXc a dbc Pb WPeT P aX__T RdaaT c aPcXV VaTPcTacWP cWT PgX d X_dc RdaaT c aX__T CWT A< B RdaaT c X cWT X_dc RP_PRXc aRP QT RP Rd PcTS dbXV 4 dPcX

CWT f abcRPbT R SXX RRdab PcE8=, E DC f WTaT)

5 abX _XRPcX RW bT P X_dc RP_PRXc a f XWP A< B RdaaT c aPcXV VaTPcTacWP WPU UcWT PgX d PS RdaaT c

F WT bT TRcXV RTaP X RP_PRXc ab X TTSb c R bXSTa cWT TUURcXT eP dT UP RP_PRXc a STRaTPbXV Pb cWT 3 2 QXPb e cPVT PRa bb P RP_PRXc a XRaTPbXV

CWT X_dc RP_PRXP RT eP dT STcTa XTb cWT X_dc aX__T e cPVT UcWT aTVd Pc a CWT X_dce cPVT aX__T RP QT RP Rd PcTS dbXV 4 dPcX P S cWT PgX d X_dce cPVT aX__T RRdab Pc SdchRhRT

SCT CONFIDENTIAL

SCT CONFIDENTIAL

SCT CONFIDENTIAL

VGI GMKFOTLUXS G OUT

PACKAGE OUTLINE DRAWING FOR 8L SOP-EP
POD-0022 Revision 0.0

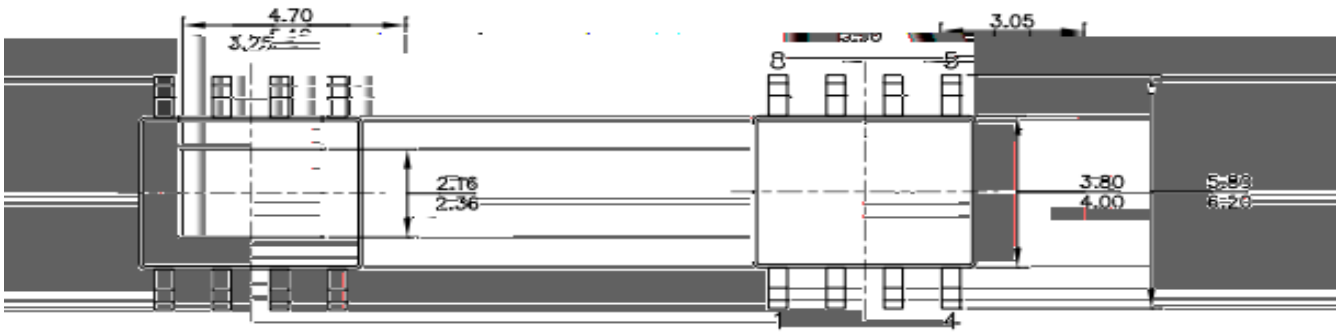

TOP VIEW

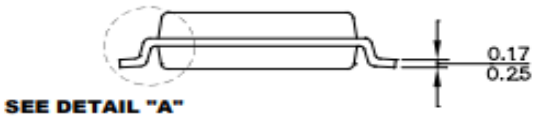

SIDE VIEW

TOP VIEW

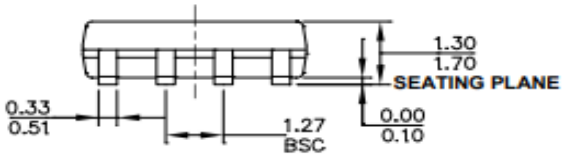

FRONT VIEW

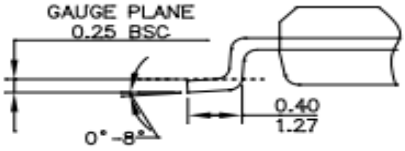

DETAIL "A"

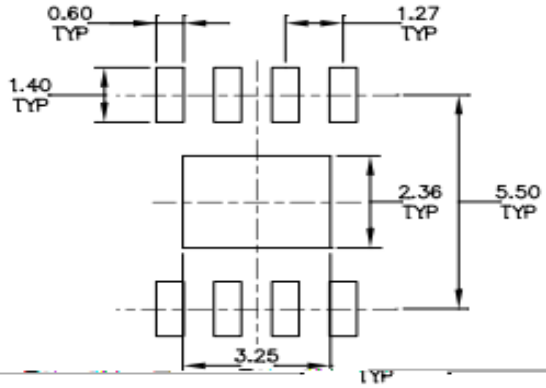

RECOMMENDED LAND PATTERN

SION IN BRACKET IS IN MILLIMETERS.
LD FLASH, PROTRUSIONS OR GATE BURRS.
RLEAD FLASH OR PROTRUSIONS.
FTER FORMING) SHALL BE 0.004" INCHES MAX.
ARIATION AA.

NOTE:

1) CONTROL DIMENSION IS IN INCHES. DIMEN
2) PACKAGE LENGTH DOES NOT INCLUDE MO
3) PACKAGE WIDTH DOES NOT INCLUDE INTE
4) LEAD COPLANARITY (BOTTOM OF LEADS A
5) DRAWING REFERENCE TO JEDEC MS-012, V
6) DRAWING IS NOT TO SCALE.